GREAT WALL

SERVICE MANUAL

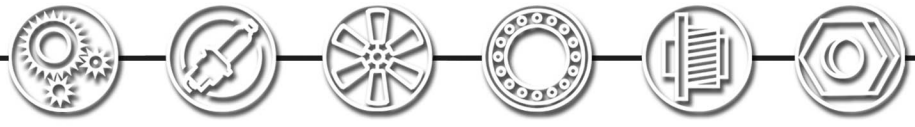

GW4D28

DIESEL ENGINE

Preface

Model Gw4D28 diesel engine is developed based on natural air suction diesel engine model 4JB1 whose technology was introduced from Isuzu, Japan. This engine features low noise, economical efficiency, fast low-temperature startup, excellent performance in both low and fast speed, low weight, compact dimension, high reliability and more powerful.

Model GW4D28 diesel engine is suitable for light truck, Pickup, SUV business car, light passenger car and other machine powered by diesel engine.

To meet the requirement of the maintenance personnel, technical personnel and management personnel, ***GW4D28 Diesel Engine Service Manual*** is complied with technical documents up to minute after arrangement and induction.

The content of this manual is full and detailed. Requirements in the manual are clear and operation is brief.The manual provides guidance for actual maintenance work as well as prodvides technical procedures as a reference for the repairer, driver, technical personnel and professional manager.

Continuing enrichment and improvement of the manual may result changes to it, however the contents and specifications are up to the minute. Defects or errors may occur in the manual, whenerver a question arises regarding this manual, please consult us.

Final authority for the interpretation of this manual belongs to Great Wall Motor Co., Ltd.

Model GW 4D28 diesel engine
Service Manual

Maintenance documents

Page

Fault diagnosis and troubleshooting

1.Difficult to start the engine

Examination	Causes	Corrections
1. The starter does not work		
Storage battery	Contact failure of the storage battery terminals because of oxidization corrosion.	Clean and refasten the terminals of storage battery.
	Uncharged or uncharged sufficiently of the storage battery	Charge or replace the storage battery.
	Loose or rupture of the generator belt	Adjust or replace the generator belt
Fuse	Short-circuit or damage of the fuse	Replace the fuse
Starter switch	Failure of the starter switch or the relay	Replace the starter switch or the relay
Starter	Failure of the electromagnetic switch or the relay	Repair or replace the electromagnetic switch.
	Starter failure	Repair or replace the starter.
2. The starter works but the engine can not rotate		
Storage battery	Contact failure of the storage battery terminals because of oxidization corrosion.	Clean and refasten the terminals of storage battery.
	Uncharged or uncharged sufficiently of the storage battery	Charge or replace the storage battery.
	Loose or rupture of the fan	Adjust or replace the fan belt
Starter	Pinion damage	Replace the pinion.
	Failure of the electromagnetic switch	Repair or replace the electromagnetic switch.
	The brush damaged or its spring too soft	Replace the brush or brush spring
Engine	Seizing or other damage of the piston or crankshaft bearings	Repair or replace related parts
3. The engine runs but can not ignited to start		
Engine stop mechanism	Damage of fuel shut-off electromagnetic valve	Replace the fuel shut-off electromagnetic valve
Fuel did not flow into the injection pump		
Fuel	Fuel tank empty	Fill in the fuel tank to full
Fuel pipe system	Fuel pipes blocked or damaged, or fuel pipe joint loose	Repair or replace the fuel pipes or refasten the fuel joint
Fuel filter	Overflow valve of fuel filter can not close	Repair or replace the overflow valve of fuel filter
	Fuel filter elements blockage	Replace the fuel filter elements
Fuel system	Air in the fuel system	Let air in the fuel system out
Fuel delivery pump	Failure of the fuel delivery pump	Repair or replace the fuel delivery pump
Fuel flows into the injection pump		
Fuel	Fuel type incorrect	Use qualified fuel
	water exists in the fuel system	Replacement fuel
Fuel system	Air in the fuel system	Let air in the fuel system out
Injector	Injector seized	Replace the injector
	Injection starting pressure too low or bad atomization of the injector	Adjust or replace the injector
Injection pump	Delivery valve damaged causing fuel drops back after injection	Replace the delivery valve
	Motion failure of injection pump control rack	repair or replace the fuel delivery pump control rack
	Injection pump plunger damaged or blocked	Replace injection pump plunger coupling parts
	Seizing or other damage of injection pump driving shaft	Replace the driving shaft
	Injection pump governor spring blocked	Replace the injection pump governor spring

Examination	Causes	Corrections
4. Fast startup system		
Preparations: 1.Disconnect lead socket joint of the temperature switch. 2.Determine if the preheating plug is switching (a)Ensure the starting switch is “opened” (b)Connect the cylinder wall and any preheating plug with a voltmeter (c)Turn the starting switch to “close” position. If the preheating plug is switching, the voltmeter will display voltage (12V) If the voltmeter finger does not move, it means that the preheating plug is not switched 3.Failure repair		
The preheating plug is switching		
The indicating light of the preheating plug is not on	Indicating light bulb damage	Replace the bulb
Fast starting timer	Fast starting timer damage	Replace the fast starting timer
The indicating light of the preheating plug is on for 0.3 second	Fast starting timer damage	Replace the fast starting timer
The indicating light of the preheating plug is on for 3.5 second	Turn the starting switch from “start” back to “close” after the engine has been started, if the preheating plug relay keeps closing for less than 14 seconds, then it indicates that the fast starting up timer is damaged.	Replace the fast starting timer
	Turn the starting switch from “open” to “close” , if the preheating plug relay keeps closing for less than 14 seconds, then it indicates that the fast starting up timer is damaged.	Replace the fast starting timer
temperature switch	Temperature switch damage	Replace the temperature switch
Preheating plug connection	Preheating plug not connected	Replace the preheating plug
The preheating plug is not connected		
The indicating light of the preheating plug is not on	Indicating light fuse broke	Replace the fuse
Fast starting timer	Fast starting timer damage	Replace the fast starting timer
The indicating light of the preheating plug is on for 3.5 second	Preheating plug relay damage The preheating plug is not switching when the starting switch turns from “open” to “ close”.	Replace the preheating plug
	Preheating plug relay wires damage	Repair or replace the wires
	Damage of fuse or wires The preheating plug is switching when the starting switch turns from “open” to “close”.	Replace the fuses or wires

2.Unstable idle speed

Examination	Causes	Corrections
Idle speed system	Idle speed improper adjustment	Adjust the idle speed
High idle speed controlling apparatus	High idle speed controlling apparatus damage	Repair or replace the high idle speed controlling apparatus
Throttle valve control system	Throttle valve control system damage	Repair or replace the throttle valve control system
Fuel system	Fuel leakage of blockage of the fuel system	Repair or replace the fuel system
	Air in the fuel system	Let air in the fuel system out
	Water in the fuel system	Replace fuel
Fuel filter	Fuel filter elements blockage	Replace the fuel filter elements

Examination	Causes	Corrections
Delivery pump	Delivery pump damage	Repair or replace the fuel delivery pump
Fuel sprayer	Fuel sprayer seized	Replace the fuel sprayer
	Injection starting pressure too low or bad atomization of the oil sprayer	Adjust or replace the sprayer
Injection pump	Delivery valve damaged causing fuel oil drops back after injection	Replace the delivery valve
	Adjustment of injection timing improper	Adjust injection timing
	Fuel injection insufficient	Adjust injection quantity
	Idle spring damaged	Replace the idle spring
	Governor control rod damaged	Repair or replace the governor control rod
	Improper adjustment of adjuster valve	Adjust or replace the adjuster valve
	Plunger spring failure	Replace the plunger spring
	Plunger wear	Replace the plunger coupling parts
	Cam wear	Replace the cam.
Air valve clearance	Improper adjustment of air valve clearance	Adjust the air valve clearance
Compressing pressure	Damage of the cylinder cover gasket Cylinder bush wear Piston ring adhesion	Replace related parts

3.Power insufficient

Examination	Causes	Corrections
Air filter	Air filter elements blockage	Clean or replace the air filter elements
Fuel oil	Water in the fuel	Replace fuel
Fuel oil filter	Fuel filter elements blockage	Replace the fuel filter elements
Oil sprayer	Sprayer seized	Replace the sprayer
	Injection starting pressure too low or bad atomization of the sprayer	Adjust or replace the sprayer
High pressure oil pipe	Damage or blockage of the high pressure oil pressure	Replace the high pressure pipe
Delivery pump	Delivery pump damage	Repair or replace the delivery pump
Injection pump	Incorrect adjustment of injection timing	Incorrect adjustment of injection timing
	Plunger wear	Plunger wear
	Speed adjustment spring too soft	Speed adjustment spring too soft
	Cam wear	Cam wear
	Incorrect adjustment of injection timing	Incorrect adjustment of injection timing
	Plunger wear	Plunger wear
	Speed adjustment spring too soft	Speed adjustment spring too soft
	Cam wear	Cam wear
Air valve clearance	Improper adjustment of air valve clearance	Adjust the air valve clearance
Compressing pressure	Damage of the cylinder cover gasket Cylinder bush wear Piston ring adhesion	Replace related parts
Air valve spring	Air valve spring too soft or rupture	Replace the air valve spring
exhaustion system	Exhaustion system blockage	Clean exhausting pipes
Seal of full load adjustment screws	Screw seals has been damaged or improperly adjusted	Adjust and reseal the adjustment screws

4.Fuel consumption too large

Examine	Causes	Corrections
Fuel system	Fuel leakage	Repair or change the according spare part of fuel system
air filter	Air filter elements blockage	Clean or replace the air filter elements
Idle speed	Improper adjustment of the idle speed	Adjust the idle speed
Oil sprayer	Injection starting pressure too low of the injector	Adjust or replace the injector
Valve clearance	Improper adjustment of valve clearance	Adjust the valve clearance
Compressing pressure	Damage of the cylinder cover gasket Cylinder bush wear Piston ring adhesion	Replace related parts
valve spring	Valve spring too soft or rupture	Replace the valve spring

5.Engine oil consumption too large

Examine	Causes	Correction
Engine Oil	Engine oil designation incorrect	Replace engine oil
	Engine oil overplus	Calibrate engine oil liquid surface
Oil seal and gasket	Leakage of engine oil from the oil seal and/ or the gasket	Replace the oil seal and/or gasket
Air ventilation port	Air ventilation port blockage	Clean the air ventilation port
Air intake valve, exhaust valve	Wear of the air intake valve, exhaust valve and valve seat cone surfaces	Replace the air intake valve, exhaust valve and the valve guide pipe, grind the cone surface of the valve seat.

6.Engine overheat

Examine	Causes	Correction
Cooling water	Shortage of cooling water	Supplement of cooling water
Fan clutch	Engine oil leakage from the fan clutch	Replace the fan clutch
Fan belt	Loose or rupture of the fan inducing slipping	Replace the fan belt
Radiator	Radiator cover damage or radiator core blockage	Replace radiator cover or clean the radiator core
Water pump	water pump damage	Repair or replace the water pump
Cylinder cover gasket	Cylinder cover gasket damage causes cooling water leakage	Replace the gasket
Thermostat	thermostat damage	Replace the thermostat
Cooling system	Cooling system blockage with foreign matters	Cooling system blockage with foreign matters
Oil injection timing	oil injection timing incorrect	Adjust oil injection timing

7. White smoke arises from the engine exhaustion fume

Examine	Causes	Correction
Cooling water	Shortage of cooling water	Supplement of cooling water
Fuel	Water in the fuel	Replace fuel
Injection timing	Injection timing lag	Adjust oil injection timing
Compressing pressure	Damage of the cylinder cover gasket Cylinder bush wear Piston ring adhesion	Replace related parts
Oil seal of the air intake valve, exhaust valve	Valve oil seal damage Wear or the valve rod or valve guide pipe	Replace the valve oil seal or valve and valve guide pipe

8.Smoke arises from the engine

Examine	Causes	Correction
Air filter	Air filter elements blockage	Clean or replace the air filter elements
Injector	Injection starting pressure too low or bad atomization of the injector	Adjust or replace the injector
Injection timing	Injection timing incorrect	Adjust oil injection timing
Injection pump	Delivery valve damaged causing fuel drops back after injection	Replace the delivery valve
	Injection overplus	Adjust oil injection quantity

9.Engine oil pressure insufficient

Examination	Causes	Corrections
Engine oil	Engine oil designation incorrect Engine oil insufficient	Replace engine oil Supplement engine oil
Engine oil pressure gauge or assembly pressure gauge indicating light	Damage of engine oil pressure gauge or assembly pressure gauge indicating light	Repair or replace engine oil pressure gauge or assembly pressure gauge indicating ligh
Engine oil filter	Engine oil filter elements blockage	Replace the engine oil filter elements
Safety valve or by-pass valve	Safety valve blocked or by-pass valve spring too soft	Replace the safety valve or by-pass valve
Engine oil pump	Engine oil pump filter screen blocked	Clean the engine oil pump filter screen
	Relate parts wear of the engine oil pump	Replace related parts of the engine oil pump
Rockshaft	Camshaft and its bearings wear	Replace the rockshaft bearings
Camshaft	Camshaft and its bearings wear	Replace the camshaft and its bearings wear
Crankshaft and bearing	Crankshaft and its bearings wear	Replace the crankshaft and its bearings wear

10. Abnormal noise from the engine

Examination	Causes	Corrections
1.Engine knock Examine if the engine has been preheated before failure examination.		
Fuel	Fuel designation incorrect	Replace fuel
Injection timing	Improper injection timing	Adjust oil injection timing
Injector	Injection starting pressure too low or bad atomization of the injector	Adjust or replace the injector
Compressing pressure	Damage of the cylinder cover gasket Piston ring breakage	Replace related parts
2.Gas leakage noise		
Exhaust pipe	Exhaust pipe joint loose Exhaustion pipe breakage	Tighten the exhaust pipe joints Replace the exhaust pipe
Injector and/or preheating plug	Injector and/or preheating plug loose	Tighten and fasten the injector and/or preheating plug Replace the washer
Exhaust manifold	Exhaust manifold loose	Tighten the exhaust manifold
Cylinder cover gasket	Damage of the cylinder cover gasket	Replace the cylinder cover gasket
3.Continuous noise		
Fan belt	Fan belt slack	Readjust tension of the fan belt
Cooling fan	Cooling fan loose	Fasten the cooling fan
Water pump bearing	Wear or damage of the water pump bearings	Replace the water pump bearings
AC electric generator or vacuum pump	Damage of AC electric generator or vacuum pump	Repair or replace the AC electric generator or vacuum pump
Valve clearance	Improper adjustment of valve clearance	Adjust the valve clearance

Examination	Causes	Corrections
4.Flapping noise		
valve clearance	Improper adjustment of valve clearance	Adjust the valve clearance
rockshaft	Rockshaft bearings wear	Replace the rockshaft bearings
Flywheel	Flywheel bolts loose	Fasten flywheel bolts
crankshaft and/or thrust bearing	Wear of crankshaft and/or thrust bearing	Replace the crankshaft and/or thrust bearing
crankshaft and/or connecting rod bearing	Wear of crankshaft and/or connecting rod bearing	Replace the crankshaft and/or connecting rod bearing
Connecting rod bushing and piston pin	Damage or wear of the connecting rod bushing and piston pin	Replace the connecting rod bushing and piston pin
Piston and cylinder casing	Wear or damage of piston and cylinder casing	Replace the piston and cylinder casing

11. Engine cooling failures

Examination	Causes	Corrections
Engine overheat	Shortage of cooling water	Supplement of cooling water
	Constant temperature device damage	Replace the constant temperature device
	Loose or rupture of the fan inducing slipping	Replace the fan belt
	Radiator damage or radiator core blockage	Replace radiator cover or clean the radiator core
	water pump damage	repair or replace the water pump
	Cylinder gasket damage causes cooling water leakage	Replace the cylinder gasket
	thermostat damage	Replace the thermostat
	Cooling system blockage with foreign matters	Clean the cooling system
	Injection timing incorrect	Adjust oil injection timing
	Exhaustion system blockage	Clean exhausting system
	Injection overplus	Adjust oil injection quantity
	Damage of the cylinder cover gasket	Replace the cylinder cover gasket
	Too low of the engine oil liquid surface or engine oil unqualified	Supplement or replace engine oil
Engine overcooling	thermostat damage	Replace the thermostat
Preheating time too long of the engine	thermostat damage	Replace the thermostat
	Constant temperature device damage	Replace the constant temperature device

Examine if the storage battery is normal and then diagnose as follow:

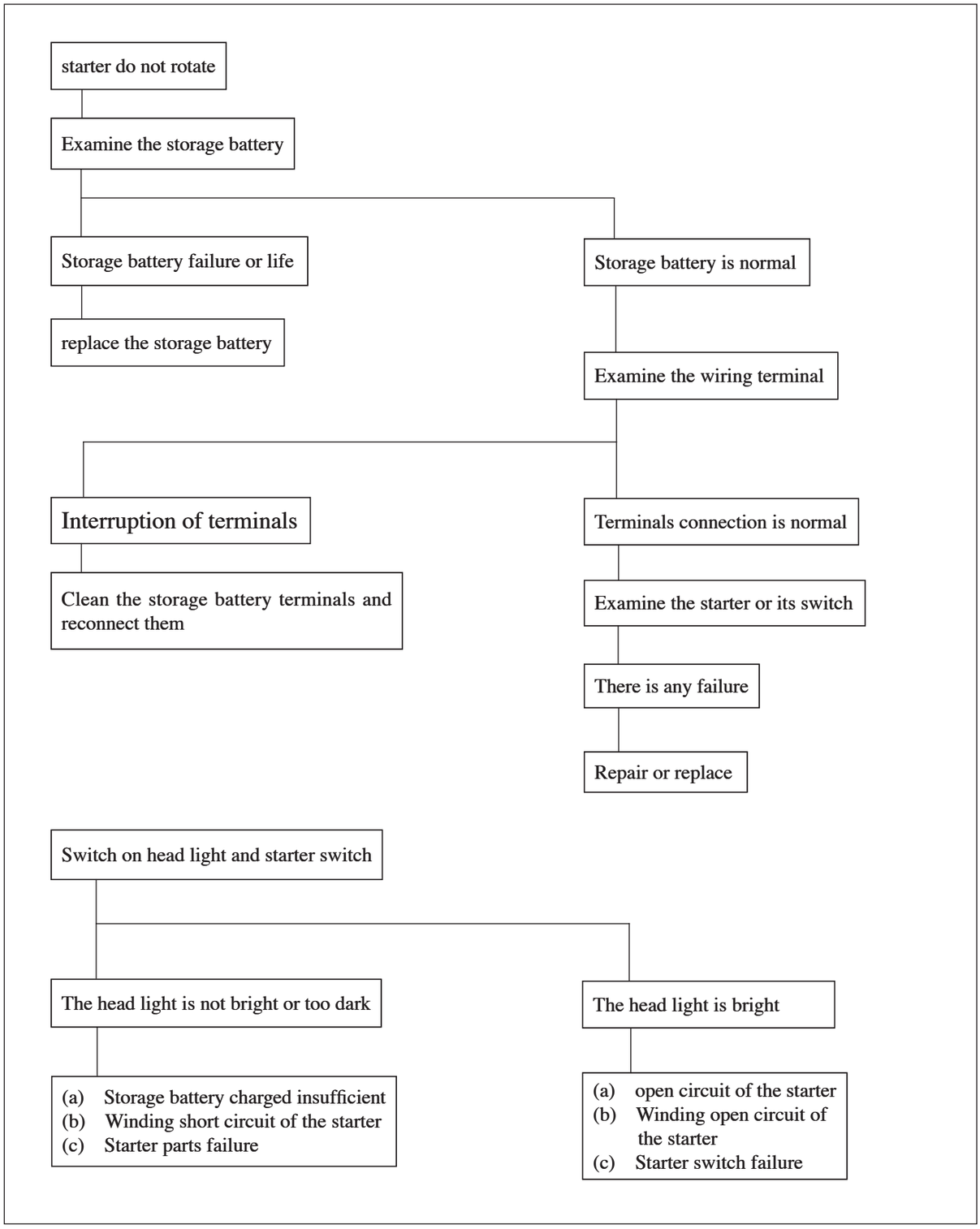

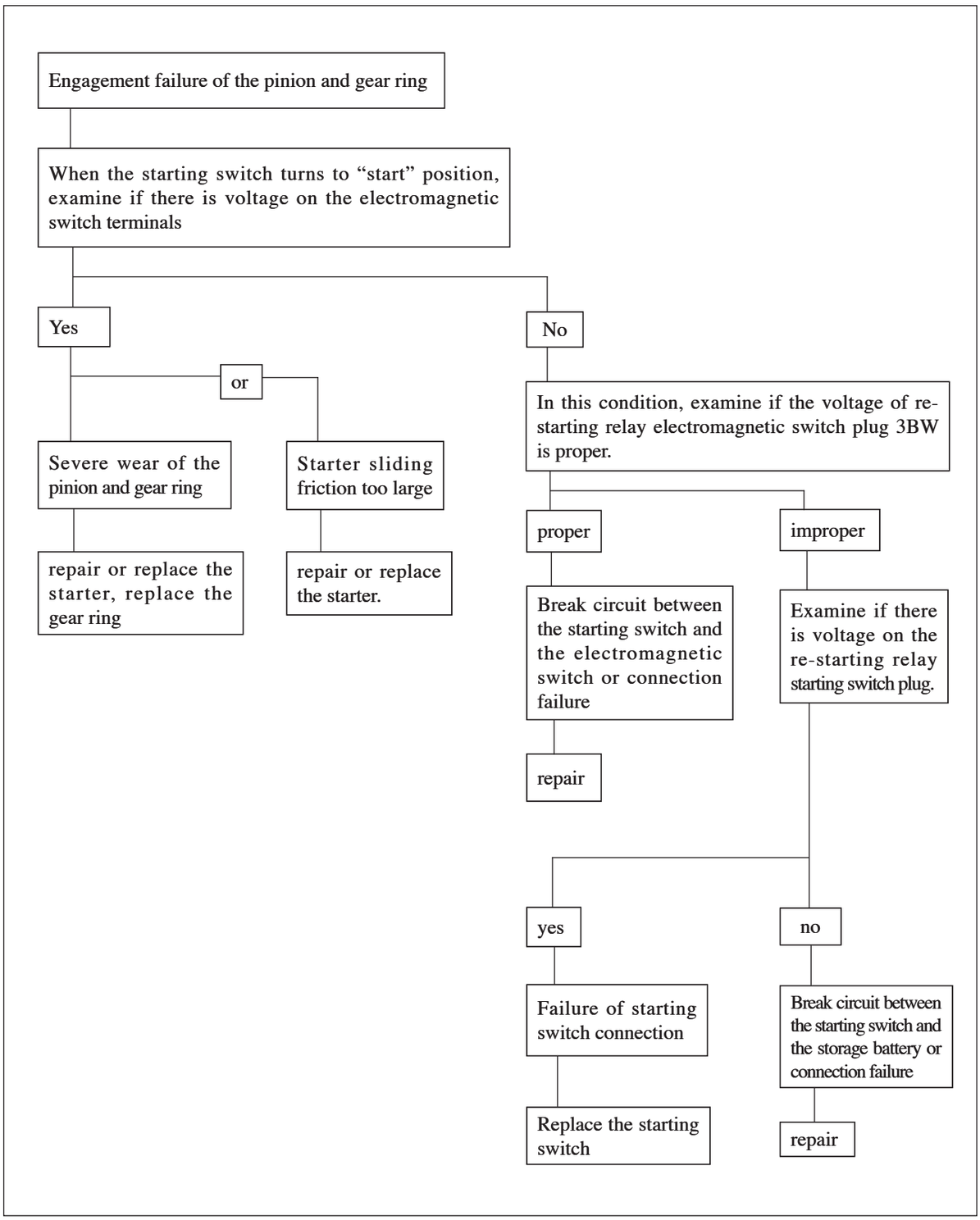
Engagement failure of the pinion and gear ring
When the starting switch turns to “start” position, examine if there is voltage on the electromagnetic switch terminals
Yes
No
or
Severe wear of the pinion and gear ring
Starter sliding friction too large
repair or replace the starter, replace the gear ring
repair or replace the starter.
In this condition, examine if the voltage of re-starting relay electromagnetic switch plug 3BW is proper.
proper
improper
Break circuit between the starting switch and the electromagnetic switch or connection failure
Examine if there is voltage on the re-starting relay starting switch plug.
repair
yes
no
Failure of starting switch connection
Break circuit between the starting switch and the storage battery or connection failure
Replace the starting switch
repair

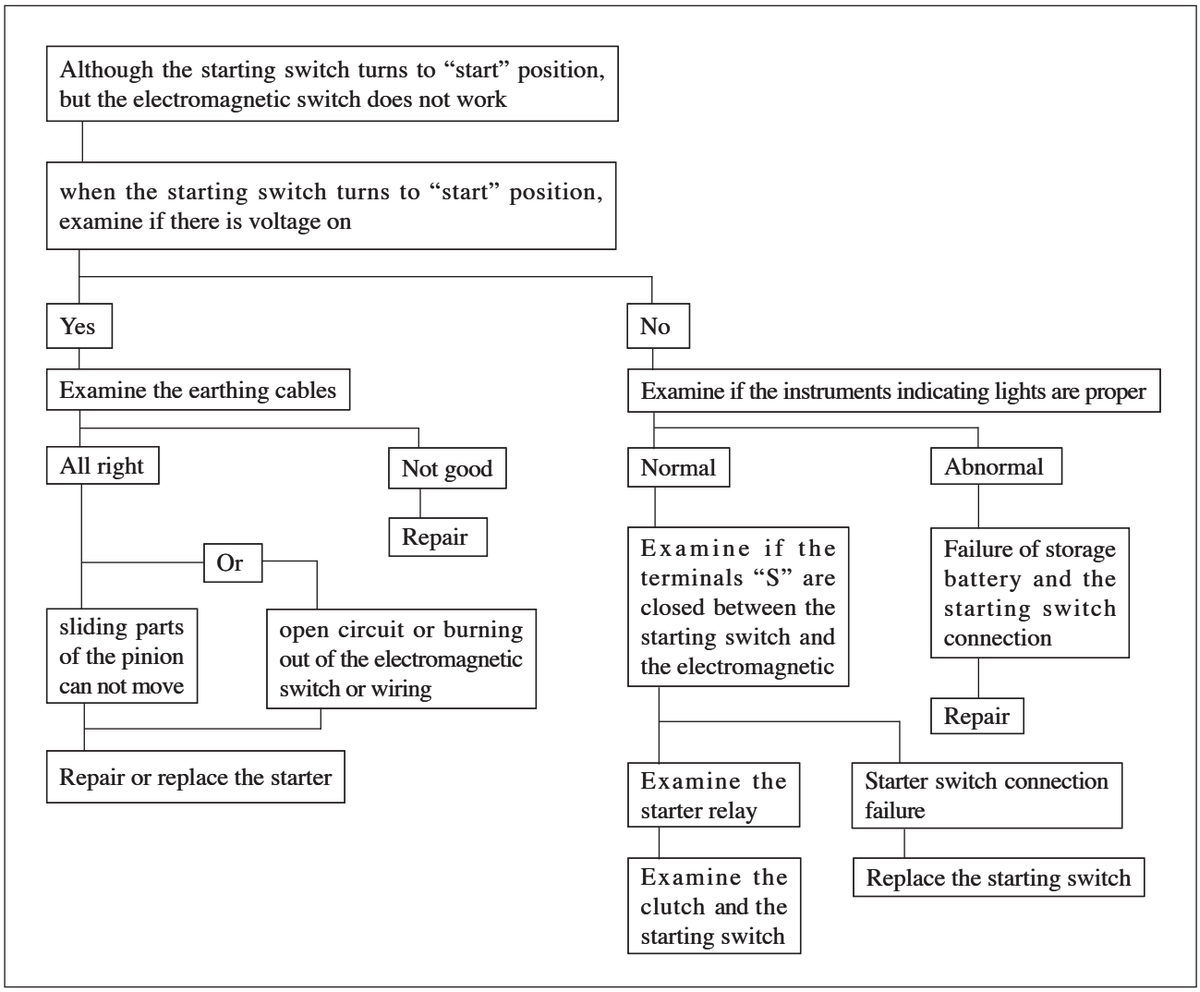
Although the starting switch turns to “start” position, but the electromagnetic switch does not work
when the starting switch turns to “start” position, examine if there is voltage on
Yes
No
Examine the earthing cables
Examine if the instruments indicating lights are proper
All right
Not good
Repair
Or
sliding parts of the pinion can not move
open circuit or burning out of the electromagnetic switch or wiring
Repair or replace the starter
Normal
Abnormal
Examine if the terminals “S” are closed between the starting switch and the electromagnetic
Failure of storage battery and the starting switch connection
Repair
Examine the starter relay
Starter switch connection failure
Examine the clutch and the starting switch
Replace the starting switch

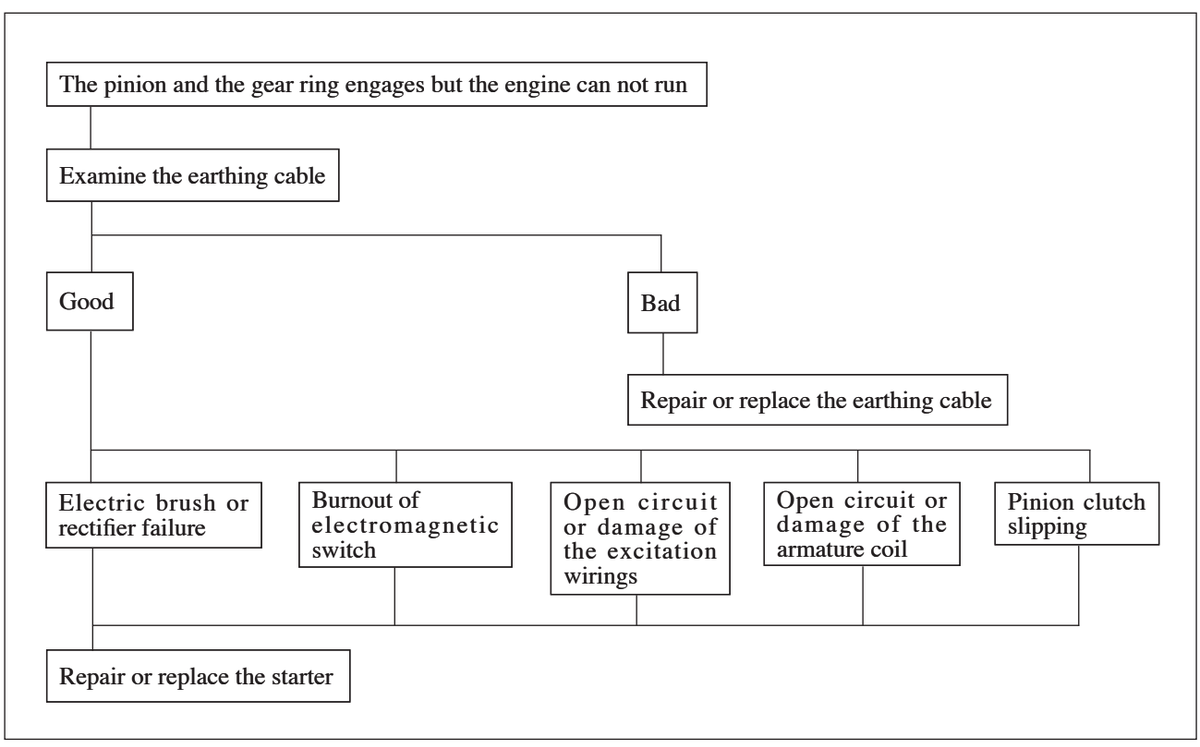
The pinion and the gear ring engages but the engine can not run
Examine the earthing cable
Good
Bad
Repair or replace the earthing cable
Electric brush or rectifier failure
Burnout of electromagnetic switch
Open circuit or damage of the excitation wirings
Open circuit or damage of the armature coil
Pinion clutch slipping
Repair or replace the starter

Main data and specifications

Main data and specifications

Items \ Engine model			4D28
Engine style			Four strokes, valve-in-head, straight, water cooling
Combustion chamber style			ω style
Cylinder bush style			Dry, chroming stainless steel tube
Cylinder number=cylinder diameter×stroke		mm	4—93×102
Piston ring number			Air ring: 2 Oil ring: 1
Total displacement		ml	2771
Compression ratio (for type I)			18.2
Compressing pressure		kPa	3038
Engine weight (net)		kg	About 229
Fuel injection sequence			1—3—4—2
Fuel injection timing		degree	Front of top dead centre 14
Prescribed fuel brand			0# light diesel (-20#light diesel for cold area)
Idle speed		r/min	750—790
Valve space (cold condition)	Air intake valve	mm	0.40
	Exhaust valve	mm	0.40
Valve space (hot condition)	Inlet valve	mm	0.45
	Exhaust valve	mm	0.45
Inlet valve	Open (front of top dead centre)	degree	24.5
	close (rear of top dead centre)	degree	55.5
Exhaust valve	Open (front of bottom dead centre)	degree	54
	close (rear of top dead centre)	degree	26

Lubricating system

Lubrication method		Compound of pressure lubrication and splashing lubrication
Prescribed engine oil brand		CD class diesel engine oil
Engine oil pump type		Gear type
Engine oil filter type		Full-flow, replaceable paper core cartridge
Engine oil capacity (including the engine oil filter)	L	6.6—7.1
Engine oil cooler type		Water cooling

Fuel system

Fuel pump type		Bosch distributing pump
Governor type		Mechanical (portion speed change)
Injector type		Hole type
Open pressure of injector	kPa	18142
Fuel filter type		Paper filter cartridge and water seperator
Air filter type		Dry paper filter cartridge
AC electric generator specifications	V-A	12—50
Starter specifications	V-KW	12—2.8

Cooling system

Cooling method		Closed forced circulation
Radiator type		Tube-band
Heat transfer	kcal/h	71400
Heat transfer area	m2	11.78
Front face area	m2	0.216
Net weight	kg	10.71
Valve opening pressure	kPa	88—118
Capacity of coolant	L	3.1
Coolant pump type		Centrifugal wheel
Transmission ratio of the belt		1.2
Thermostat type		Wax pellet (with swing valve)
Valve opening temperature	°C	82
Valve wide opening temperature	°C	95
Total capacity of coolant	L	10

Startup system

Items \ Model		DENSOR
Rating		
Voltage	V	12
Output power	KW	2.8
Startup time	sec	5
Pinion teeth number		9
Rotation direction (from the pinion end)		Clockwise
Weight (about)	kg	5.4
No load characteristic		
Voltage/current	V/A	11.5/120 or less
Rotation speed	r/min	4000 or more
Load characteristic		
Voltage/current	V/A	7.5/500 or less
Torque	N·m	13.0
Rotation speed	r/min	1400 or more
Brake characteristic		
Voltage/current	V/A	2.0/850 or less
Torque	N·m	15.7 or more

Charging appliance

Items \ Model		HITACHILR150—449B
Rated voltage	V	14
Rated current	A	50
Rotation direction (from the driving end)		Clockwise
Effective diameter of the pulley	mm	80
Weight (including pump)	kg	6.0

Maintenance standard

Engine mechanical system

Unit: mm

Parts	Items	Standard value	Operating limit	Notes
Cylinder cover	Flatness of the cylinder cover and outlet manifolds mating surfaces. Cylinder cover height Angularity of cylinder cover bottom surface Angularity of manifold mating surface Combustion chamber clank block falling Pressure exerted on the combustion chamber clank block	≤0.05 92±0.05 ≤0.05 ≤0.05 —— 44100-53900N	0.2 —— 0.20 0.20 0.02 ——	Can not be reground
Cylinder spring	Free height Verticality Spring tension(N) Installation height	48.0 1.5 296 38.9	47.10 1.7 257.9 ——	
Valve and valve guide pipe	Valve rod diameter Air Inlet Exhaust Clearance between valve and valve guide pipe Air Inlet Exhaust Valve guide pipe top height (measured from the cylinder cover top plane) Margin of the valve guide pipe valve thickness Air Inlet Exhaust Valve seat contact angle (degree) Valve seat contact width Air Inlet Exhaust	$7.95^{+0.011}_{-0.004}$ $7.93^{+0.006}_{-0.009}$ 0.039—0.069 0.064—0.096 13.0 1.1 1.79 1.83 45 1.7 2.0	7.880 7.850 0.200 0.250 —— 1.6 1.5 1.5 < 45 2.2 2.5	
Push rod	Degree of curvature	0.40	≤ 0.4	
Camshaft	Axial gap cam height Journal diameter Radial jumping Camshaft bearing inner diameter Camshaft oil gap	0.08 42.02 49.96±0.015 ≤0.02 $50_{0}^{+0.03}$ 0.025—0.085	0.2 41.65 49.60 0.10 50.08 0.12	
Transverse member	Outer diameter Oil gap (between the rocker and the rockshaft)	12.97—12.99 0.03	12.95 0.10	
Radial direction jump of the rockshaft	The outer diameter of the rockshaft The inner diameter of the rockshaft Oil gap(between the crank arm the crankshaft) Radial direction jump of the rockshaft	18.98—19.00 19.036—19.060 0.06—0.08 0.20	18.90 19.10 0.10 ≤0.2	
Engine oil pump	Oil gap Between the pump and the gear wheel Between the pump cover and the gear wheel	0.13—0.14 0.02—0.07	0.15 0.15	

Maintenance standard (Supplement)

Unit: mm

Parts	Items	Standard value	Operating limit	Notes
Crankshaft	Axial gap	0.10	0.30	
	Radial jumping of the main journal and the connecting rod journal	≤0.05	0.08	
	Main journal diameter	$70^{+0.068}_{-0.083}$	69.91	
	Connecting rod journal diameter	$53^{+0.070}_{-0.085}$	52.90	
	Non-uniform wear of the main journal and the connecting rod journal	≤0.05	0.08	
	Gap between the connecting rod journal and the connecting rod bearing	0.029—0.066	0.100	
	Gap between the main journal and the main bearing	0.035—0.080	0.110	
Piston, piston pin, piston ring and the connecting rod	Piston ring diameter	$93^{+0.024}_{-0.015}$	>93.024	
	Piston gap (between the piston and the cylinder bush)	0.025—0.045	<0.025	
	Opening clearance of the piston ring			
	The first ring	0.20—0.40	1.5	
	The second ring	0.20—0.40	1.5	
	Oil ring	0.10—0.30	1.5	
	Clearance of the piston ring			
	The first ring	0.090—0.125	——	
	The second ring	0.050—0.075	0.15	
	Oil ring	——	0.15	
	Piston pin diameter	$31^{0}_{-0.005}$	30.970	
	Assembly Interference (between piston pin and its seat hole) (Cold state)	0.002—0.015	0.04	
	Connecting rod adjustment			
	Rod body linearity	≤0.08	0.20	
	Parallelization of two reducer holes	≤0.05	0.15	
	Gap between the piston pin and the connecting rod bushing	0.008—0.020	0.050	
	Axial gap of the connecting rod	0.230	0.35	
	Oil gap between the connecting rod journal and the connecting rod reducer	0.029—0.066	0.10	
Engine body	Engine body top surface distortion	——	0.20	
	Cylinder hole diameter	$95^{+0.040}_{-0.011}$	——	
	Cylinder bush projection quantity	0.0-0.1	——	
	Inner diameter of the cylinder casing	93.020—93.060	——	
	Inner diameter of the cylinder casing (rough hole)	95.011—95.050	——	

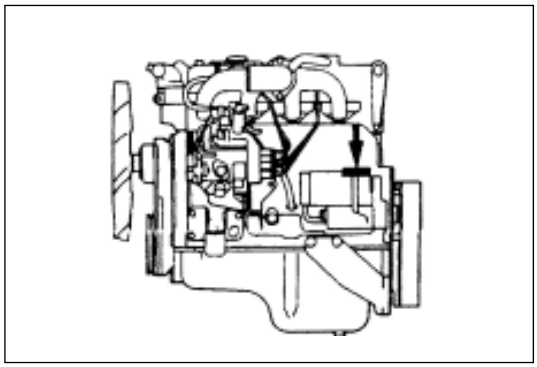

Maintenance work

Attention:

Normal maintenance works shall be carried by qualified maintenance personnel.

Mark

Engine serial number

The serial number of the engine is stamped on the left side of front end of the engine body.

Air filter

Cleaning methods vary for different filter cores.

Filter core blockage by dust

Turn filter core by hand, at the same time blow air into the filter core, then the dust can be blown off.

The pressure of compressed air is 392 to 490kPa.

Attention：

Do not hit the filter core onto other objects for the purpose of cleaning; otherwise the filter core will be damaged.

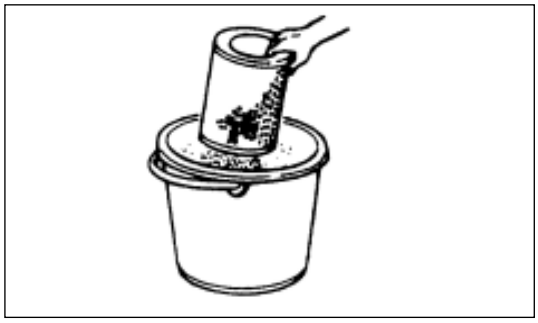

Filter core blockage with carbon and dust

(a) Prepare original air filter core cleaning solution produced by the Great Wall Car Company, and dilute it with water.

(b) Immerse the filter core into the cleaning solution for about 20 minutes.

(c) Take out filter core from clearner,make it well cleaned, water pressure should not exceed 274kpa

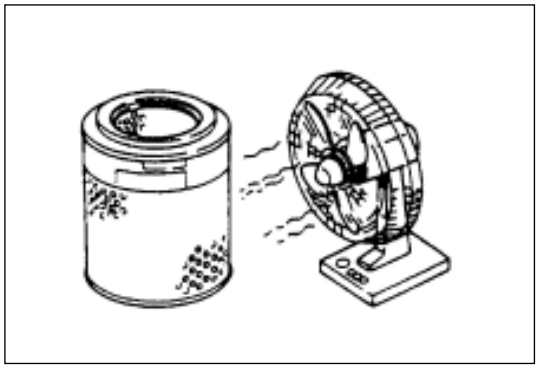

(d) Dry filter core in a well-ventilating site
Accelerate drying speed with electric fan.

Attention:

Do not accelerate drying process with compressed air or naked flame,or, the filter core will be damaged.

Normally, a filter core can be dried for two to three days, and then spare parts are needed at hand for temporary usage.

Pick the filter core out of cleaning solution and wash it with flowing water.

The water pressure shall not more than 274kPa.

Lubricating system

Main oil filter (paper type filter core)

replacement procedure

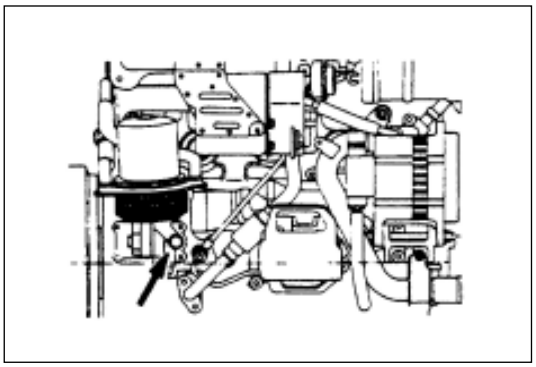

Lubricating system

Main oil filter (paper type filter core)

replacement procedure

(a) Loose oil drain plug and drain oil.

(b) Tighten again the oil drain plug after several minutes.

(c) wist off used filter counter clockwise with filter wrench.

(d) Clean the mating surface of oil cooler.It can make new oil filter assembly suitable.

(e) Apply a thin film of oil on the O-ring surface.

(f) Screw down the new oil filter until the O-ring and sealing surface bind together.

(g) Screw down for 1.25 turns with filter wrench.
Filter wrench: 5-8840-0200-0
5-8840-0202-0
5-8840-0209-0

(h) Examine the oil level, add to the prescribed level if required.
0.7LOil filling capacity is 0.7L.

(i) Start the engine and check if there is any leakage in the oil filter.

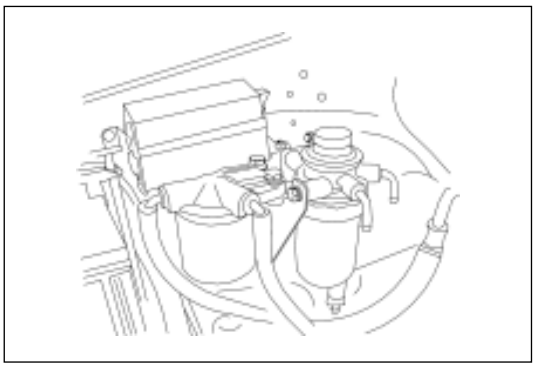

Fuel system

Replacement procedure of fuel filter

(a) Twist off used filter counter clockwise with filter wrench.
Filter wrench: 5-8840-0253-0(J-22700)

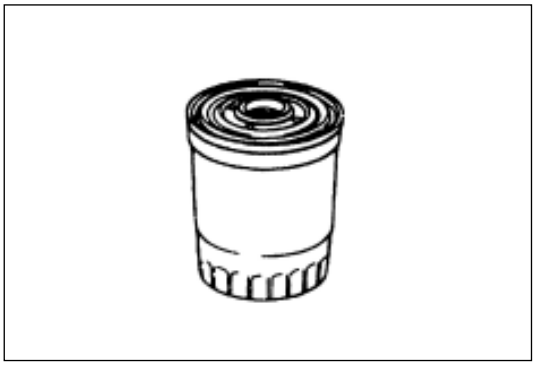

(b) Clean the mating surface of the filter base plate.
It can make new fuel filter assembly suitable.

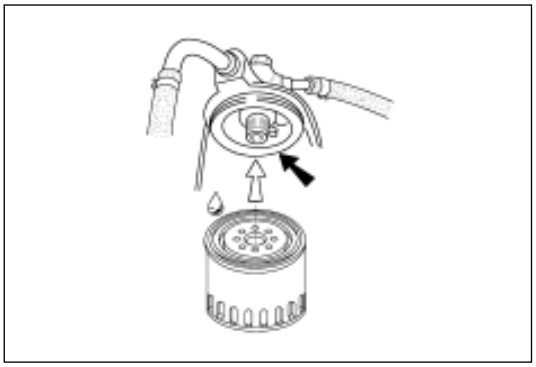

(c) Screw down new fuel filter until it can contact with the sealing surface.

(d) Screw down for 2/3 turns with filter wrench.
Filter wrench: 5-8840-0253-0(J-22700)

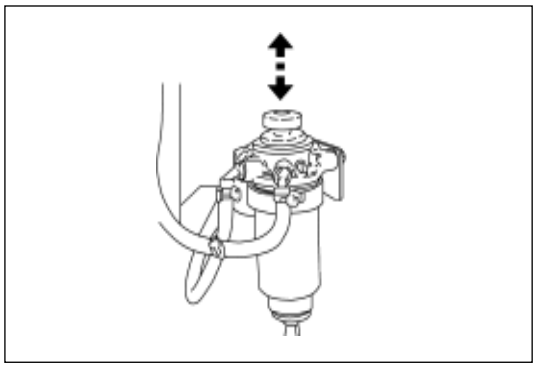

(e) Loose the vent valve on top of the overflow valve of injection pump.
(f) Start the injection pump until fuel flows out of the fuel filter.
(g) Retighten the vent plug.
(h) Start injection pump up and down several times and check if there is any leakage of fuel.

Attention:

Original fuel filter produced by the Great Wall Car Company is recommended.

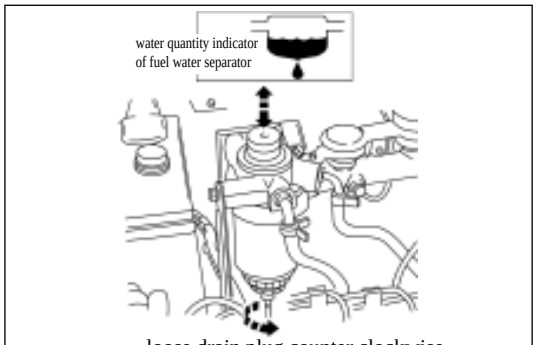

loose drain plug counter clockwise

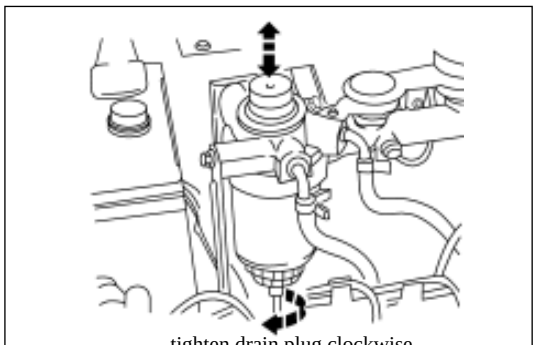
tighten drain plug clockwise

Blowdown procedure of water separator.

When water content surpasses prescribed value, the indicating lamp will light.

Drain water and other foreign material according to the following procedures.

(a) Park the car in a safe place.
(b) Open the outer cover of the engine and place a vessel (capacity 0.2L) at the end of ethane hose under the drain plug of water separator.
(c) Loose drain plug counter clockwise for about 5 turns and start injection pump up and down for about 10 times to drain about 0.1L water.
(d) After drainage, tighten drain plug clockwise immediately and start the injection pump for several times.
(e) Start the engine and check is there is any fuel leakage from the water drain plug.At the same time, check if the indicating lamp of water separator is off.

vent procedure of water separator.

(a) Loose the vent screw on top of the overflow valve of injection pump.
(b) Start the injection pump up and down until fuel mixed with foam flows out of vent screw.
(c) Tighten vent screw.
(d) Start injection pump several times and check if there is any leakage of fuel.

Cooling system

Coolant liquid level

Inspect the coolant liquid level, fill the water overflow tank of the radiator if required.If the coolant liquid level below the mark “MIN”, examine carefully if there is any leakage of cooling system and fill in coolant until the coolant liquid level reaches “MAX”.

Attention:

- not overfill water overflow tank.
- ver of watering orifice can only be opened when absolutely necessary.
- olant liquid level inspection shall always be carried out when the engine is cold.

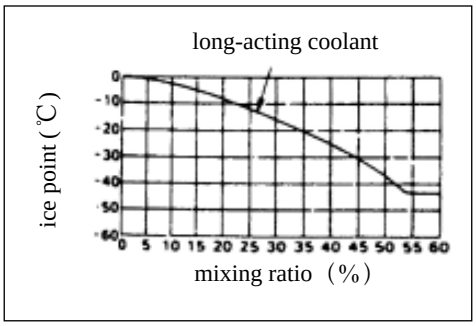

- Mixing ratio of cooling water vs. anti-freezing liquid shall always be determined according to the left diagram.

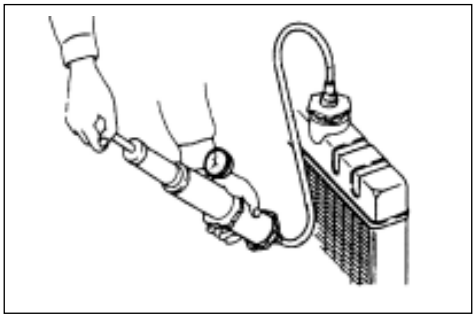

Inspection of cooling system

Mount the tester of the radiator water filling port onto the radiator.

Increase the pressure of the cooling system to examine if there is any leakage.

Attention:

The test pressure shall not surpass prescribed pressure.

The test pressure is 196kPa.

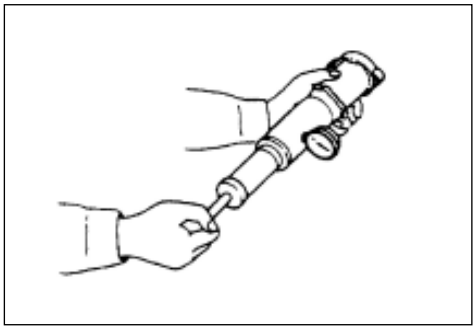

Radiator inspection

The water filling port cover of the radiator shall be designed to maintain prescribed pressure in the cooling system

Examine if the design of water filling port cover of the radiator meets the requirements with the tester of water filling port cover of the radiator.

The water filling port cover must be replaced if the prescribed pressure can not be maintained during the test.

The prescribed pressure of the water filling port cover of radiator is:

Pressure valve: (88-118)kPa

Negative pressure valve (reference value): (1.0-3.9)kPa

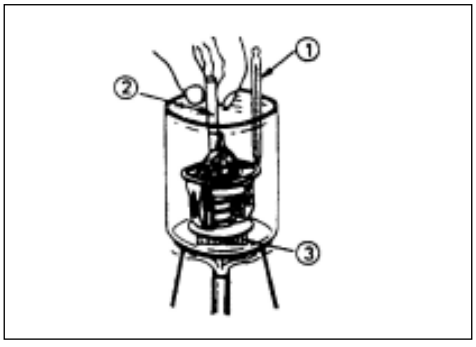

Thermostat action test

(a) Immerse the thermostat into water totally.

(b) Heat water.

Stir water continuously to prevent thermostat from direct heating.

(c) Check the original open temperature of the thermostat.

The original open temperature of the thermostat is 82˚C.

(d) Adjustment of drive belt

The wide open temperature of the thermostat is 95˚C.

Valve wide open lift range: 10mm.

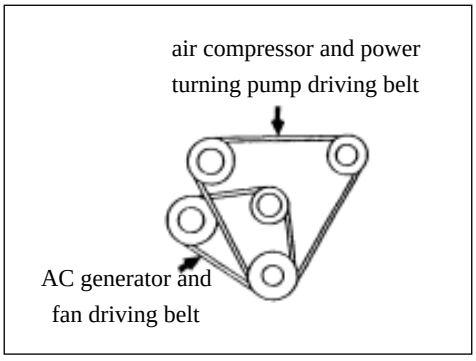

Check the wide open temperature of the thermostat

(a) Examine if there is any wear and damage of drive belt, replace it if necessary.

(b) Examine the rate of tension, adjust it if necessary.

(c) Press the middle of the drive belt with 98N force and examine the belt deflection.

Standard deflection: (8-12)mm.

Engine control

Examine the idle speed

(a) Operate car hold-up brake and retard driving wheel.
(b) Set the gearbox in free position.
(c) Start the engine and warm it.
(d) Remove engine control pull wire from the control rod.
(e) Mount the revolution indicator onto the engine.
Examine the idle speed of the engine.
If the idle speed surpasses prescribed range, adjust it.
The idle speed of the engine: (750-590) r/min.

Adjust the idle speed

(a) Loose the idle speed adjustment locknut on the oil injection pump.
(b) Adjust the idle speed to prescribed range with the idle speed adjustment bolt.
(c) Lock the idle speed adjustment bolt with the locknut of idle speed adjustment bolt.
(d) Examine if the idle speed control pull wire has been pulled tight (no relax).Remove the relaxed part (if any).

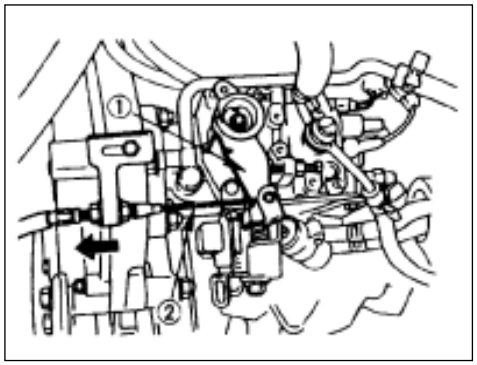

Adjustment of the throttle pull wire

(a) Loose the support bolts of throttle pull wire.
(b) Examine if the control button is in engine idle speed.
(c) Set the throttle pull rod at fully-closed position, then strength control pull wire along the direction of arrow to eliminate all relax.

Adjustment of throttle control

(a) Loose locknut
(b) Adjust height between the adjustment bolt and the base plate.
Height shall be 18-28mm (SL).
(c) Check if the throttle control is in the range of 5-10mm above the throttle control dead block.
(d) Press the throttle control fully, examine if the engine speed is maximum and if every joint operates steadily.
(e) The throttle control and injection pump pull rod should easily return to their original position in their action range.

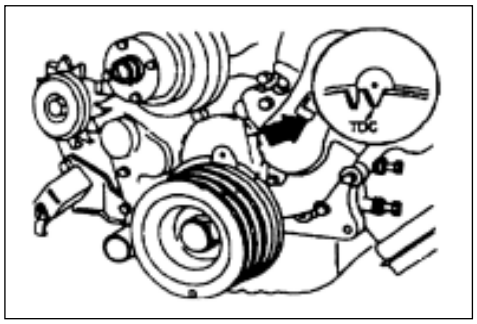

Adjustment of valve space

(a) Turn the crankshaft until the top dead point line of the crankshaft vibration damper aligns with timing pointer. At this time, the piston either in the first cylinder or the fourth cylinder is at the top dead point of compression travel.

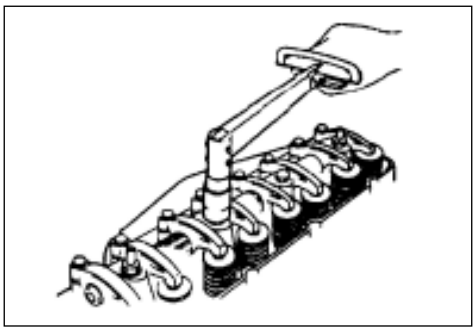

(b) Examine if the support nuts of oscillating beam shaft loosed. Screw down any loosed support nuts of oscillating beam shaft before valve space adjustment.
Tighten torque: 54N • m

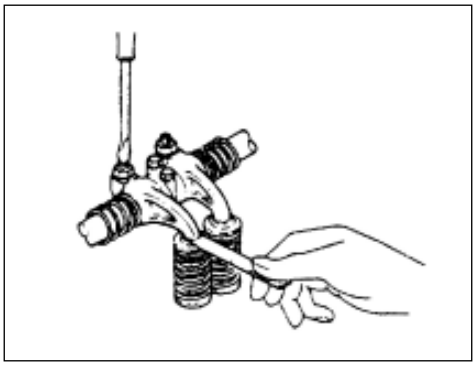

(c) Examine the space between the push beams of air intake valve and exhaust valve in the first cylinder.
If there is any space between the push beams of air intake valve and exhaust valve in the first cylinder, then the piston in the first cylinder is at top dead point of compression travel.
If the push beams of air intake valve and exhaust valve in the first cylinder are compressed, then the piston in the fourth cylinder is at top dead point of compression travel.
Adjust the space of the valves in the first cylinder or the fourth cylinder, when the corresponding cylinder is at top dead point of compression travel
Valve space (cold condition) 0.4mm

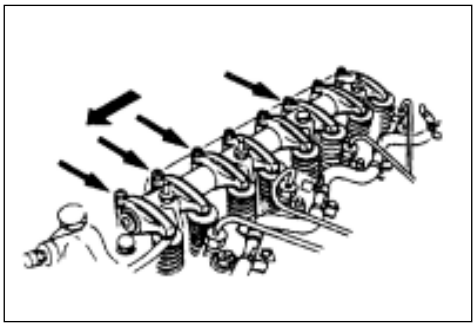

(d) Loose each valve space adjustment bolt as shown in the diagram.
(e) Insert the feeler with thickness complied with the space between air intake valve and exhaust valve into the middle of oscillating beam and valve.
(f) Turn the adjustment bolts of valve space until there is light resistance on the feeler.
(g) Screw down the locknut tightly.
(h) Turn the crankshaft for 360 degree.
(i) Realign the timing mark on the pulley of crankshaft vibration damper with the top dead point scratch.

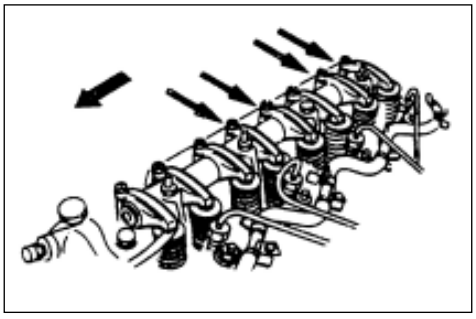

(j) Adjust the space of other valves as shown on the diagram.

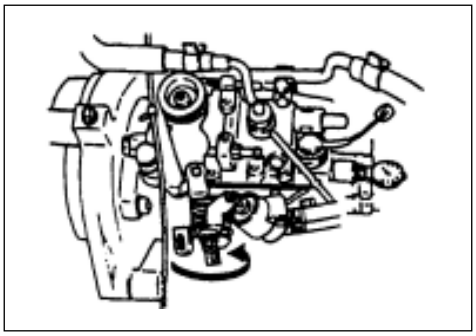

Adjustment of oil injection timing

(a) Set the piston in the first cylinder at top dead point.
(b) Dismount the plug on top of the oil injection pump distributor.
(c) Remove wax type cold start device with screwdriver hand lever.
(d) Mount a micrometer gauge and prepress to 1mm.
(e) Align the dead point mark on the pulley of crankshaft vibration damper to the point 45 degree from the top dead point indicating hand.

(f) Set the micrometer gauge on “0” position.
Measurement device: 5-8840-0145-0

(g) Turn the crankshaft right and left slightly, examine if the pointer of the micrometer is at the position of “0”.

(h) Turn the crankshaft along operating direction and read out the measurement device when the crankshaft is at the top dead point.
The original timing reading is 0.5mm.

(i) If the oil injection surpasses prescribed range, continue to finish the next procedure.

(j) Loose locknuts and support bolts of oil injection pump.

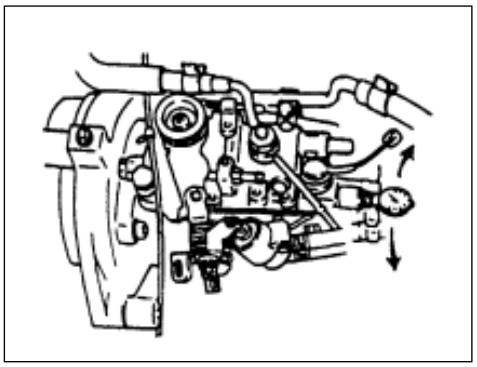

(k) Adjust the assembly angle of oil injection pump.

- If set forward the oil injection timing, move the oil injection pump to the engine.
- If retard the oil injection timing, move the oil injection pump away from the engine.
- Screw down the retaining nuts, adjusting bolts and oil injection pump distributor top plug to prescribed torque.

Screw down torque of oil injection pump retaining nuts is: 24N•m
Screw down torque of oil injection pump adjusting bolts is: 19N•m
Screw down torque of oil injection pump distributor top plug is: 54N • m
Attention: new copper carrier ring must be used when assemble distributor top plug.

Compressing pressure measure

(a) Start the engine and let it operate in idle speed until the coolant temperature reaches 70-80℃.

(b) Remove the following parts:

- All of the preheating plugs
- Fuel shutoff magnet coil plug board.
- Fuse of QOS(quick start system) on the plug board.

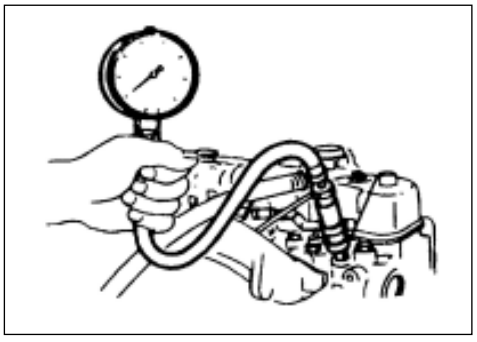

(c) Mount the joint and pressure gauge into the preheating plug hole of the first cylinder.

Compressing pressure gauge
Belt joint: 5-8840-2008-0-(J-29762)
Joint: 5-8531-7001-0

(d) Drive the engine with the starter and record the pressure gauge reading.

When the speed is 200r/min, the operating pressure is kPa

Standard	Limit
2942	2157

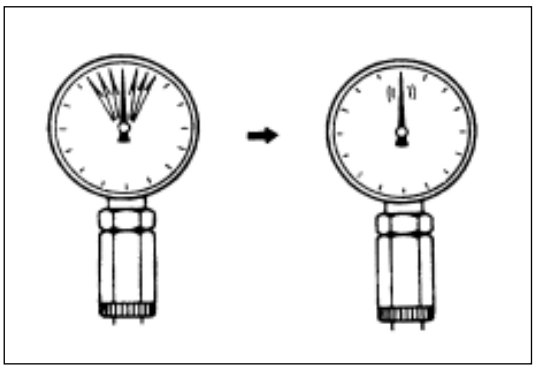

(e) Repeat procedure (c) and procedure (d) for the other cylinders.
If the measurement value is less than prescribed value, refer to section ìFault diagnosis and debugging ìin this manual.

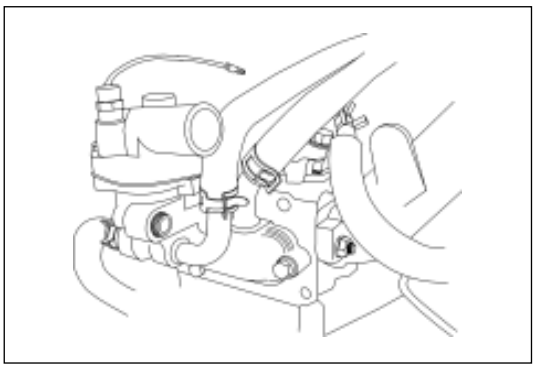

Fast start II system

Fast start system examination procedure

(a) Disconnect the water temperature sensor wires of thermostat.

(b) Turn the starting switch to ìcloseî position.
If the fast start II system operates regularly, then the preheating relay will give out minute static electricity disturbance sound after then switch turns on.

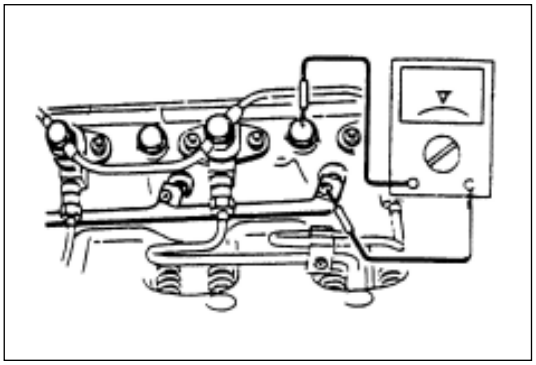

(c) Measure the voltage of preheating plug end with multimeter after the start switch turns to ìcloseî position.
The voltage of preheating plug end is about 11V.

Fastening torque

Cylinder cover shield 、Rockshaft assembly 、Cylinder cover

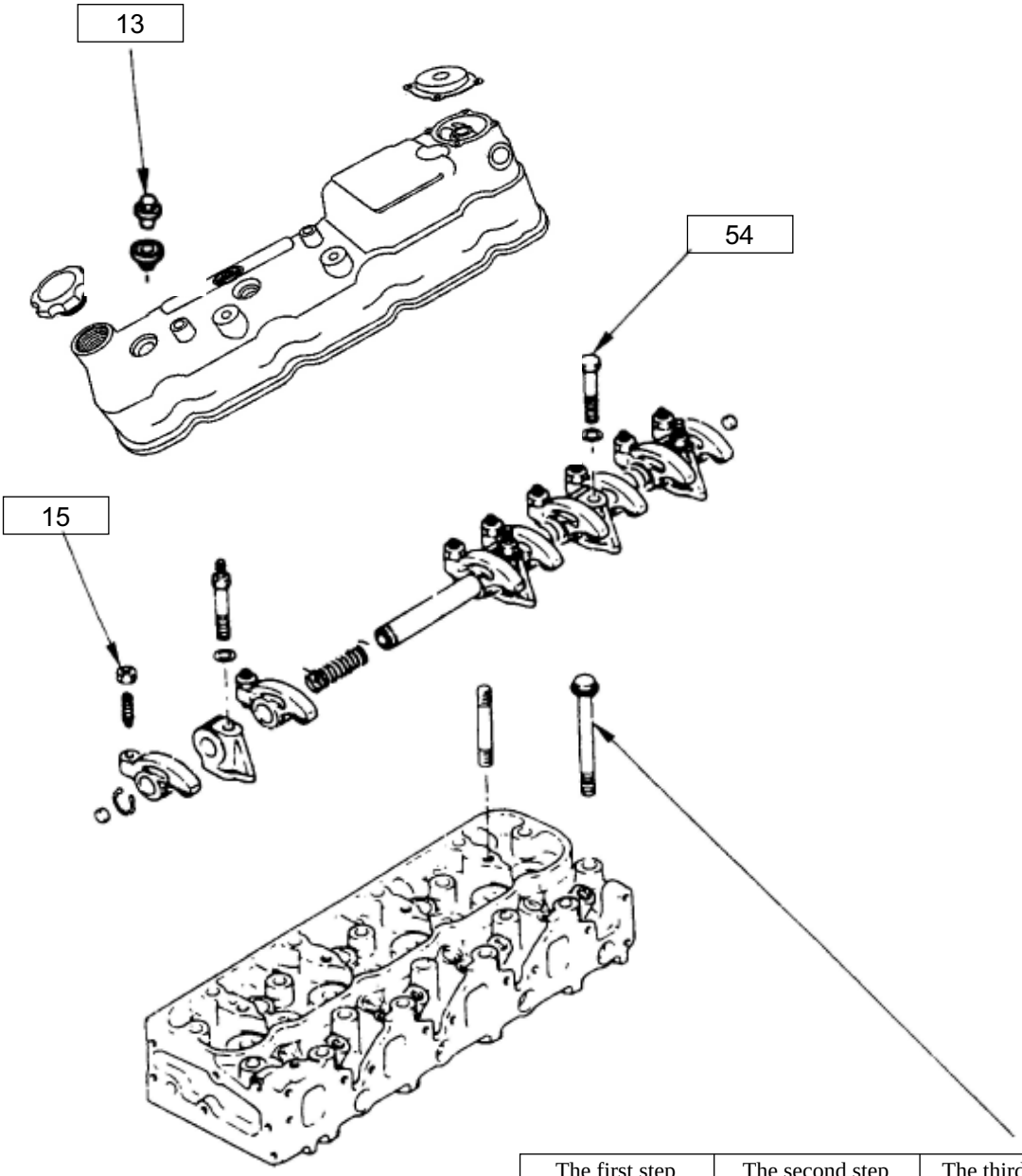

The first step	The second step	The third step
49	60-75˚	60-75˚

N • M :prescribed torque

Crankshaft. Main bearing cover .Connecting rod bearing cover.Crankshaft vibration absorber pulley .Flywheel. Oil bottom casing

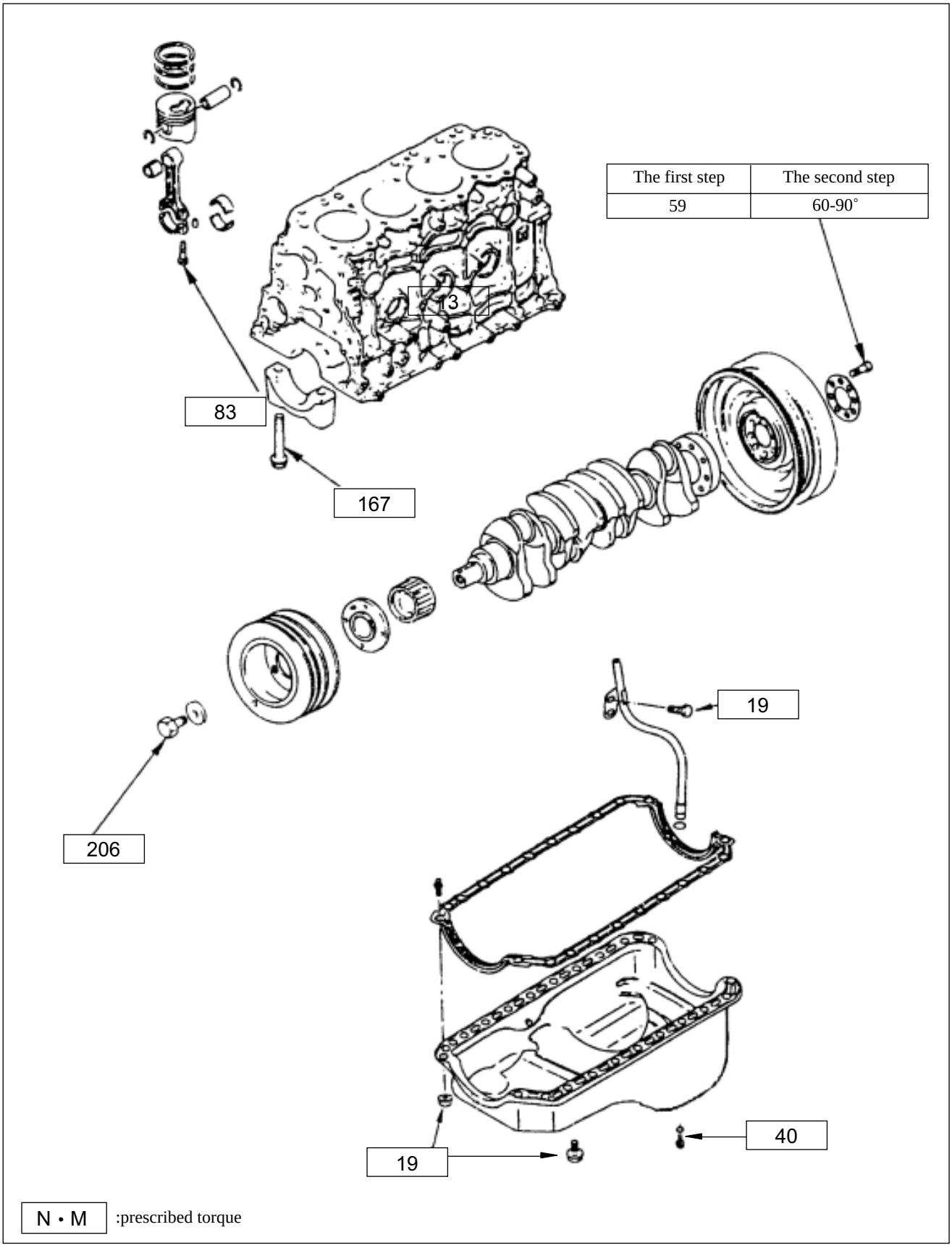

The first step	The second step
59	60-90°

Timing gear Timing gear chamber Back plate of the machine body

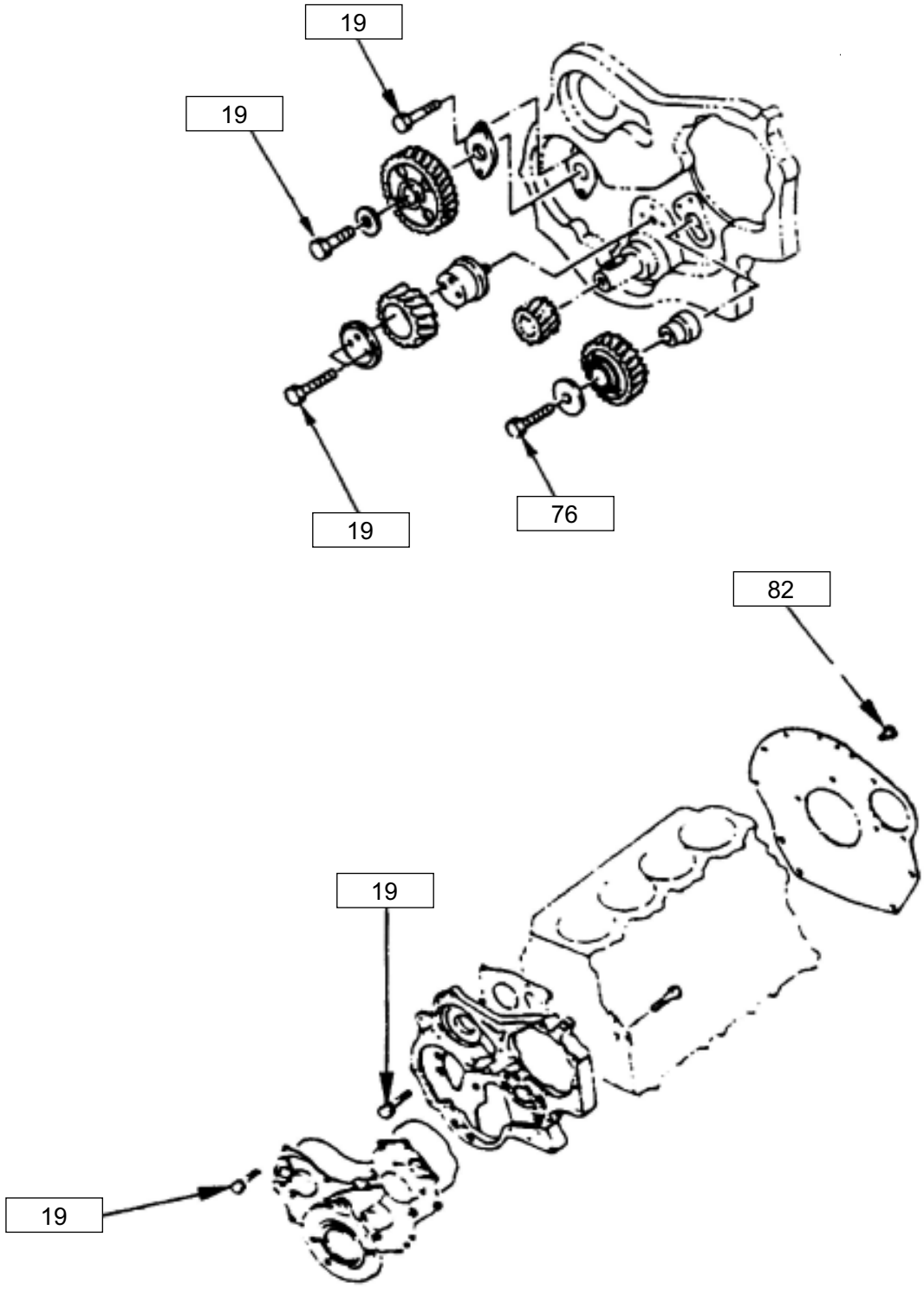

N • M :prescribed torque

Cooling system and lubricating system

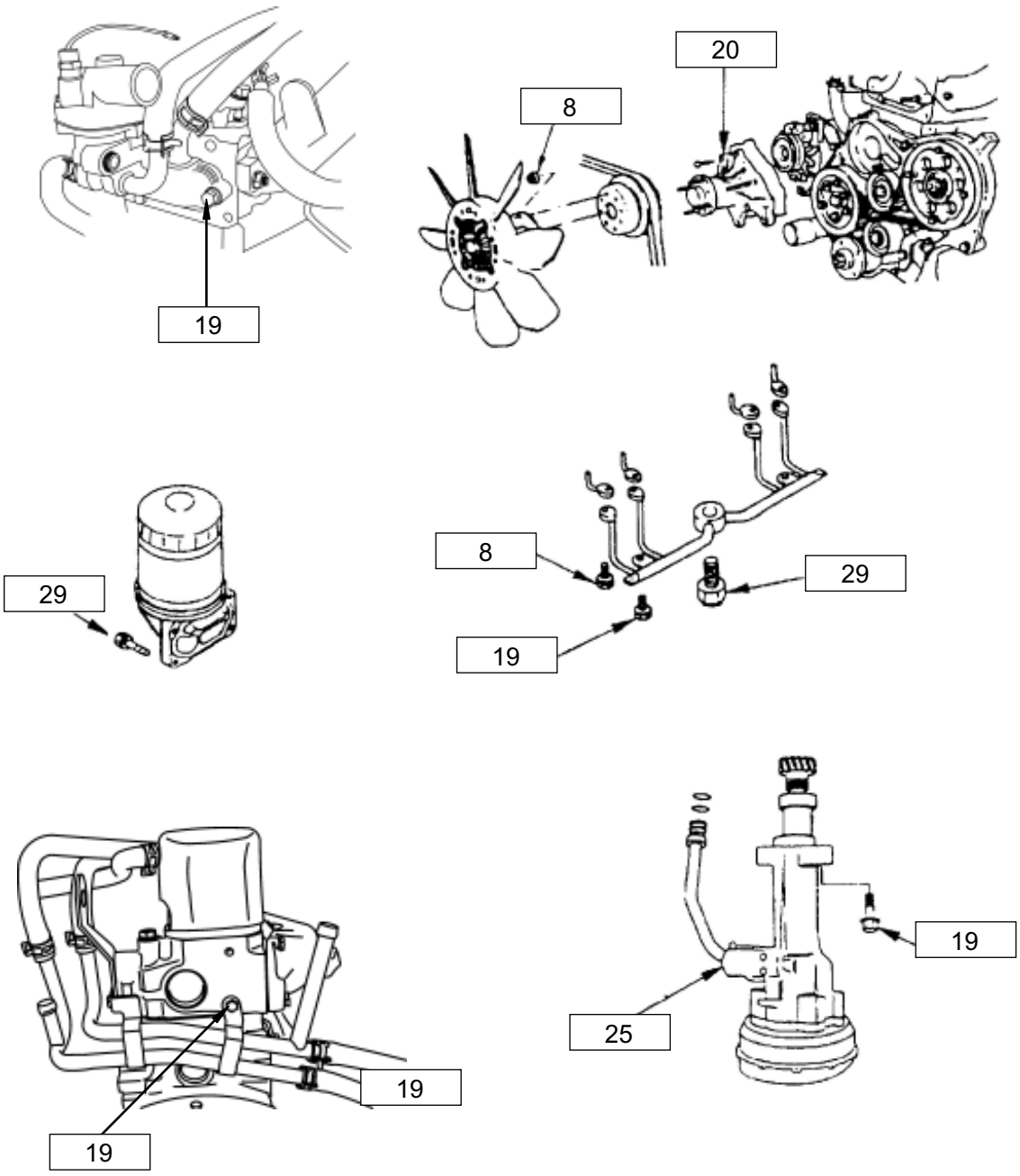

N • M :prescribed torque

Air inlet manifold Exhaust manifold Front exhaust pipe

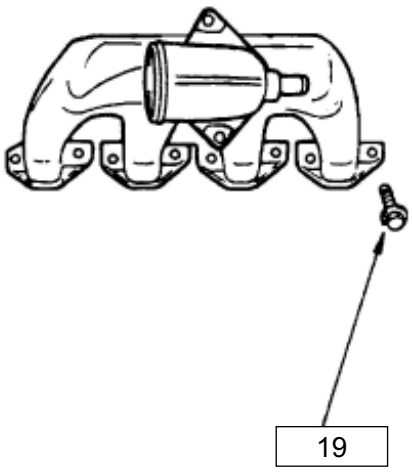

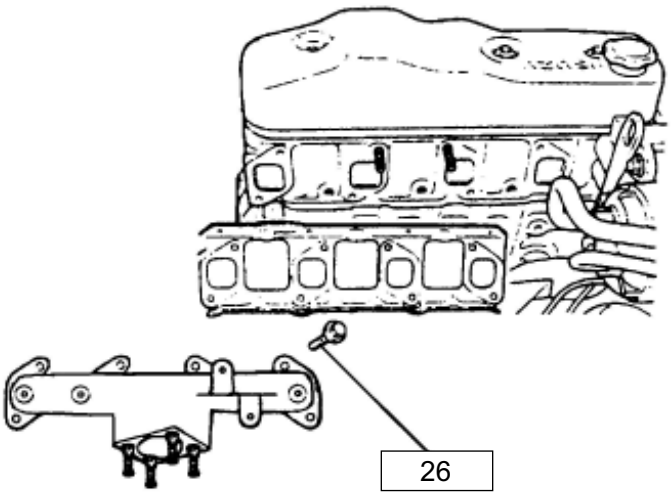

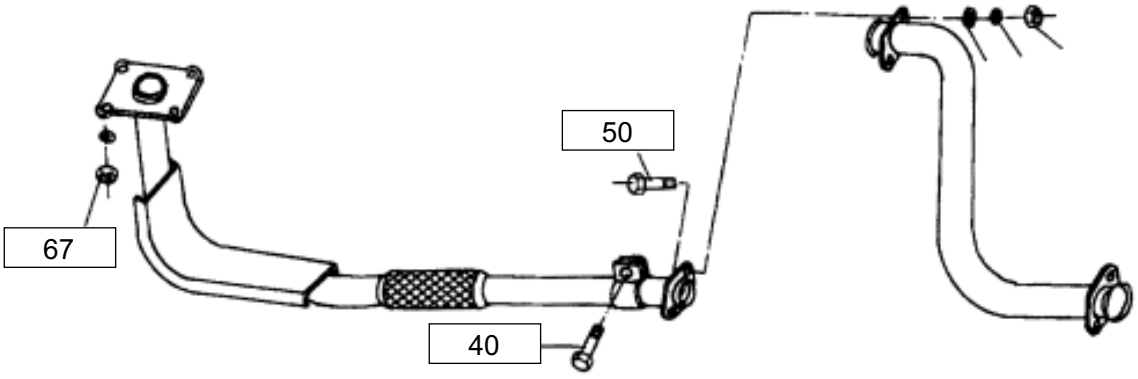

N • M :prescribed torque

Engine electrical system

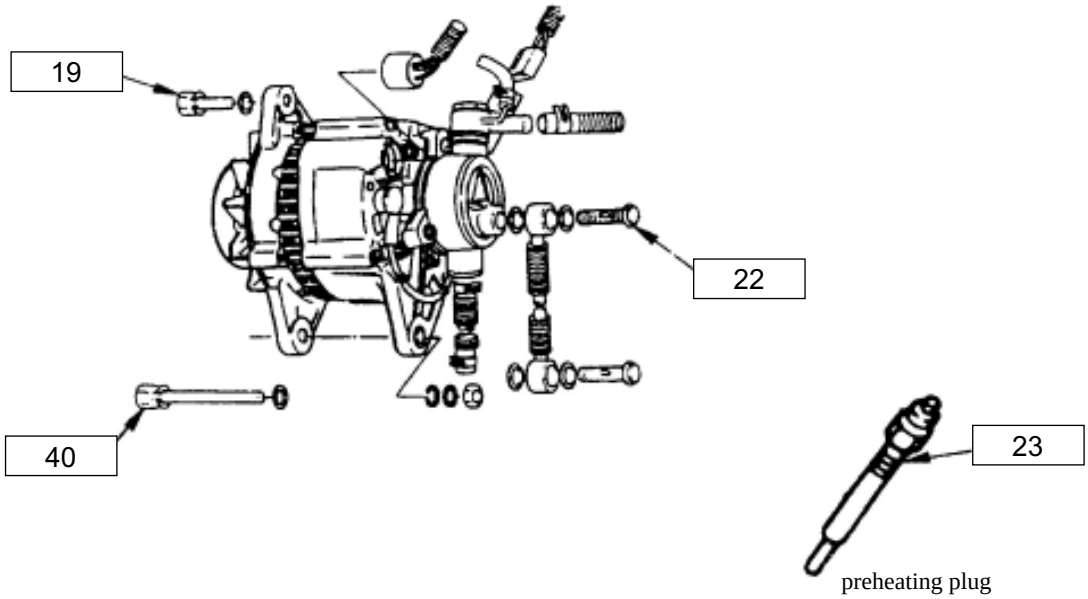

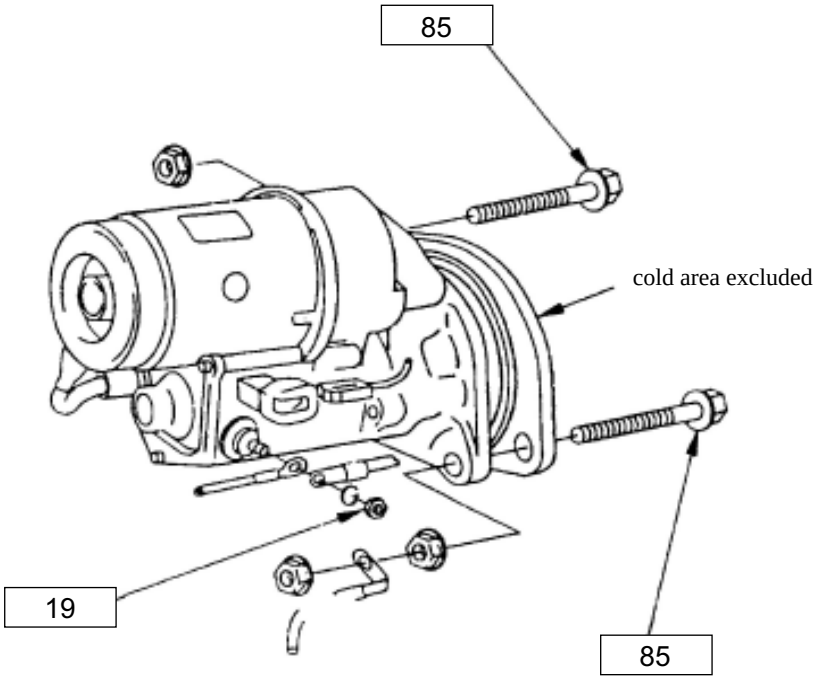

N • M :prescribed torque

Engine fuel system

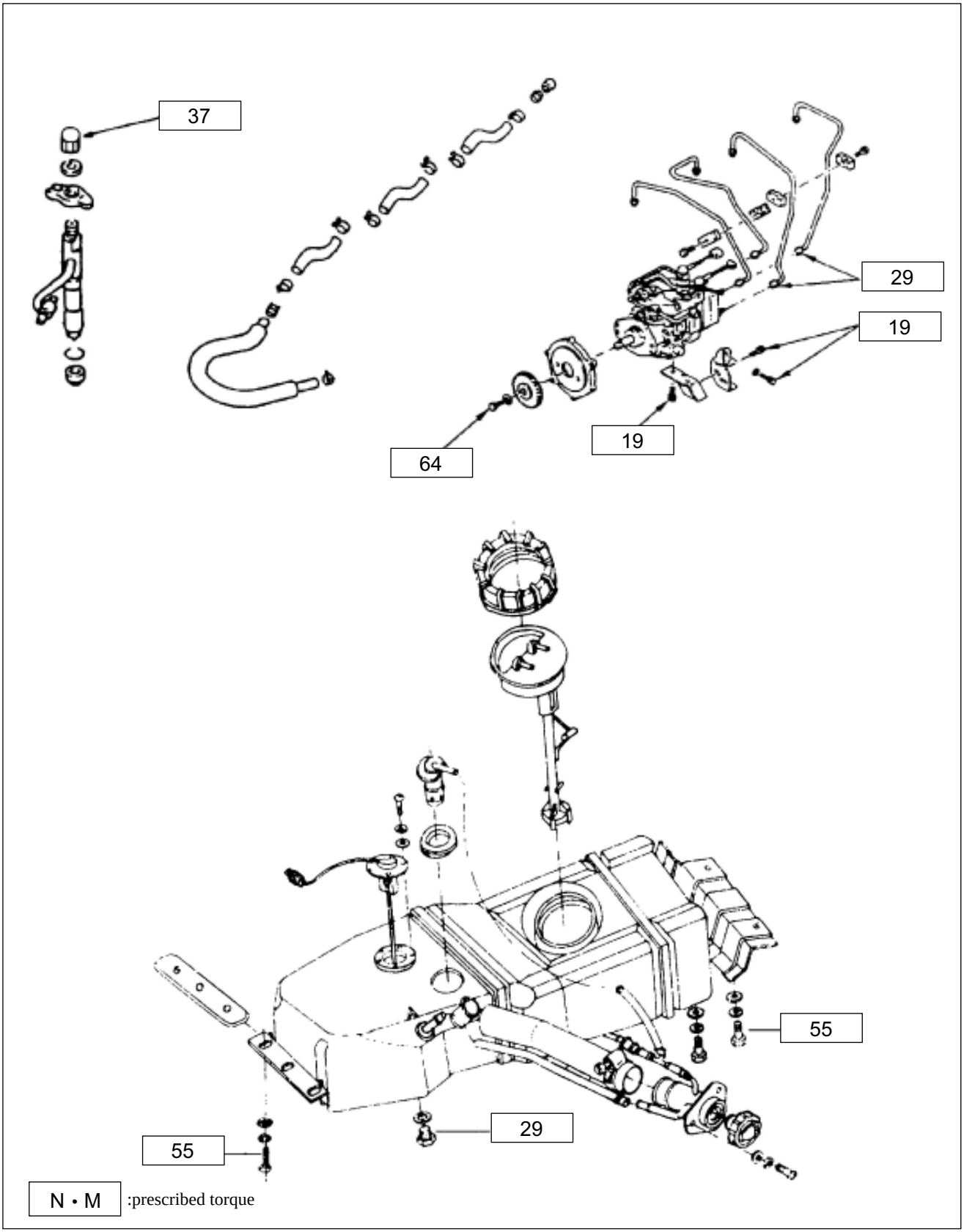

Installation support of the engine

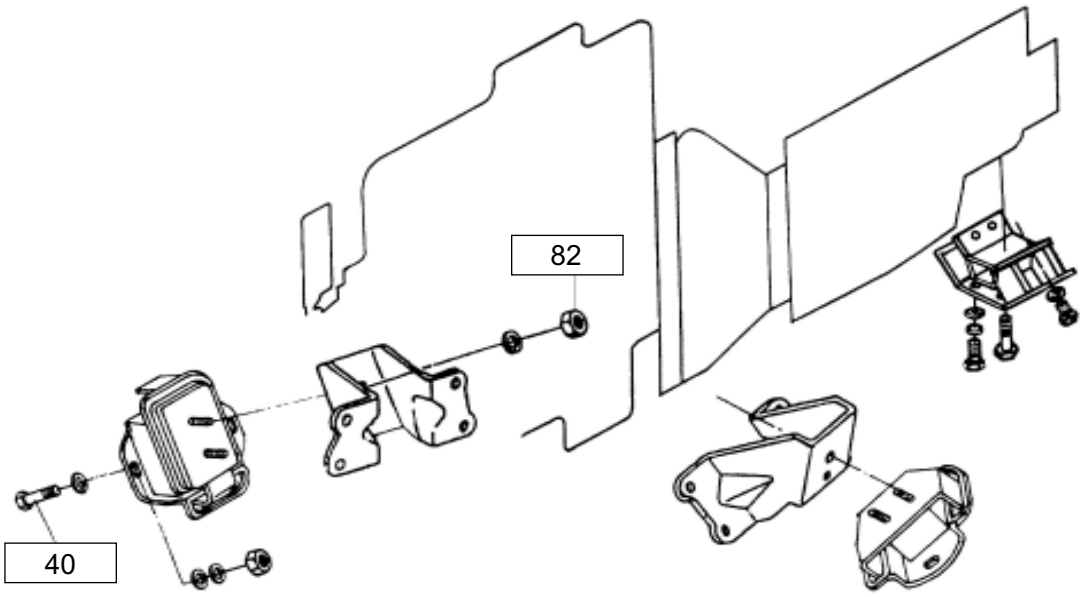

N • M :prescribed torque

Mechanical system

Page

Cylinder cover

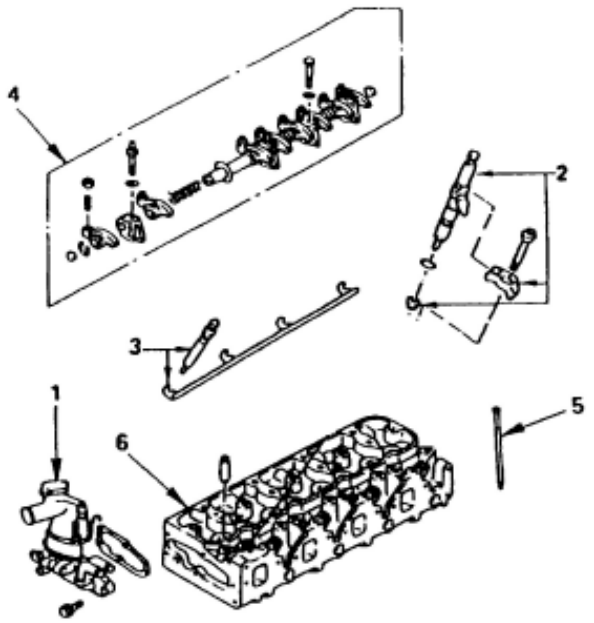

Disassembly procedure

1. thermostat body assembly
2. oil sprayer body
3. preheating plug and plug link plate
4. rockshaft assembly
5. push rod
6. cylinder cover

Reassembly procedure

Reassemble according to the reverse procedure of disassembly.

Attention:

- When disassembly, the parts of air valve assembly shall be collected in a place and marked with identification sign so that they can be restored to their original location.
- Compression test shall be carried out and its result shall be recorded before remove cylinder cover from the engine and disassemble air valve mechanism.

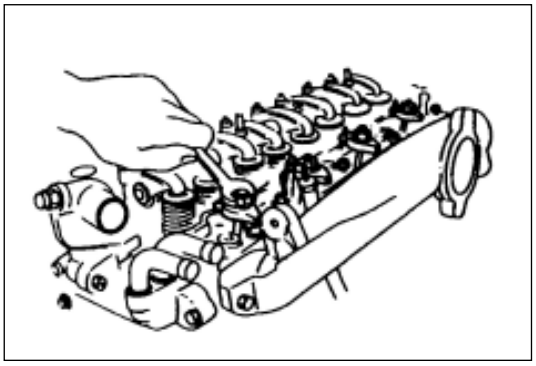

Disassembly

1. Thermostat body assembly
2. Oil sprayer body
   (a) Dismount press plate bolts of oil sprayer.

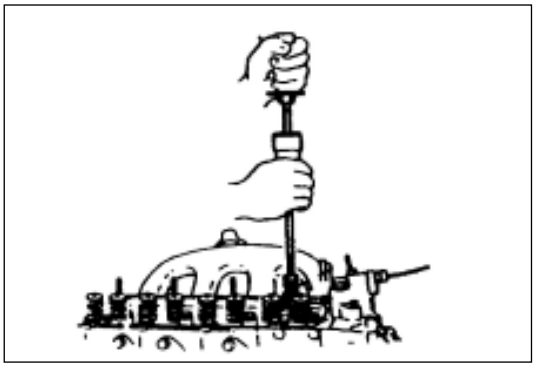

   (b) Dismount the oil sprayer body and press plate all in together with oil sprayer body detacher and slide hammer.
   Oil sprayer detacher: 5-8840-2034-0
   Slide hammer: 5-8840-0019-0

3. Preheat plug and plug link plate
4. Rockshaft assembly
5. Pushing bar

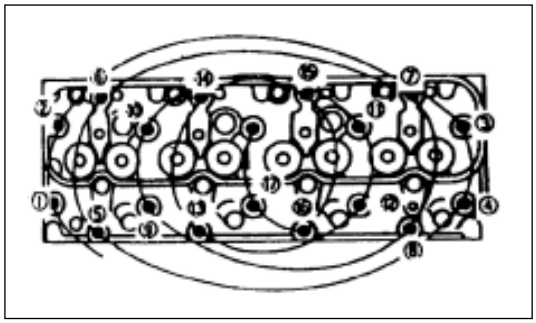

6. Cylinder cover

Loose the cylinder cover bolts gradually for several times according to the order number shown in the diagram, each for a little.

Attention:

If you fail to do so, the bottom surface of the cylinder cover will be damaged.

Clean up

1. Cylinder cover bolt
2. Cylinder cover

Clean up all of the oil dirt, carbon fume and built-up carbon until the metal local color appears.

Do not use electric driven metallic wire brush for any gasket sealing surface.

Inspection and maintenance

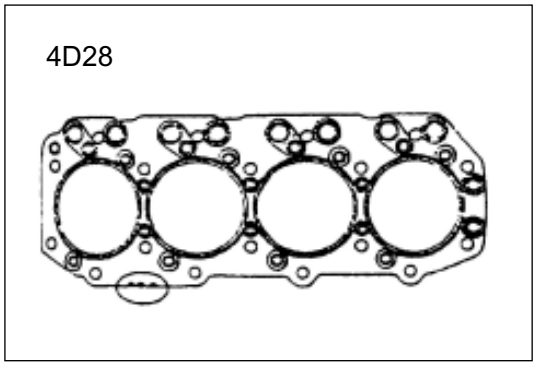

Parts must be adjusted, repaired or replaced when excess wear or damage is found in examination.

(1) Examine if there is any leakage, corrosion or gas blow by in the gasket of cylinder cover.

If the gasket fails, the results shall be determined:

(a) Improper assembly

(b) Cylinder cover loose or distorted

(c) Screw down torque of cylinder cover bolts insufficient

(d) Engine body surface distorted

(2) Examine if there is any damage or elongation of cylinder cover bolts or if there is any damage of cylinder cover because of improper use of tools.

Notes:

Suspicious bolts must be replaced.

(3) Examine if there is any crack on the cylinder cover, especially around the air valve seat and exhaust opening.

(4) Examine if there is any corrosion on the bottom surface of the cylinder cover and if there is any sand inclusion and porosity inner the cylinder cover.

Notes:

Do not try to weld up the cylinder cover. Replace immediately if the cylinder cover is damaged.

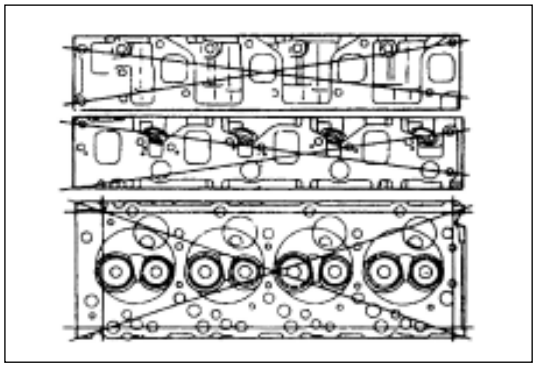

(5) Examine the flatness of the cylinder cover plane and inlet/outlet manifolds mating surfaces.

these surfaces can be mended through grinding.

If surface roughness exceeds prescribed limit, the surface shall be grinded to meet the technical requirements

It shall be replaced if the surface roughness exceeds technical requirements much.

mm

	Staandard	Limit
Angularityy of the cylinder boottom surface	0.05 or smaller	0.20
The heiight of the cylinder cover	92	991.55

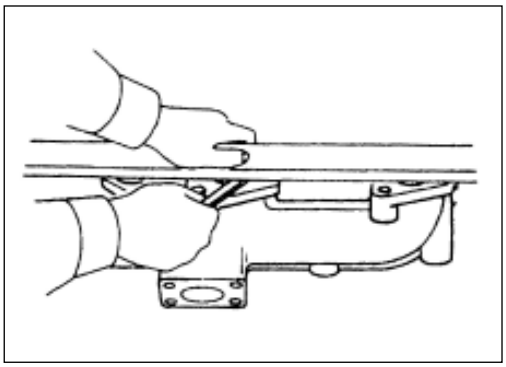

(6) Examine the mating surface of water jacket sealing plugs.

(7) Measure angularity of the mating surface between the exhaust manifold and the cylinder cover with a ruler and a feeler gauge.

The mating surface shall be reground if the measurement value is between the prescribed limit value and standard value.

The exhaust manifold must be replaced if the measurement value exceeds the prescribed limit value.

Angularity of mating surface between the exhaust manifold and the cylinder cover .

mm

Standard	Limit
0.05 or smaller	0.20

Reassembly

1. Cylinder cover

(1) Assemble valve seat (cold-press assembly)

(a) Mount the accessory ① (its outer diameter less than the valve seat) onto the valve seat ②.

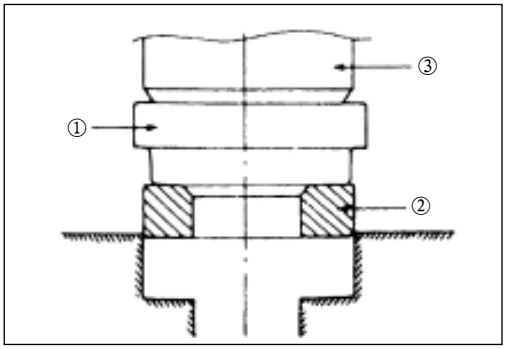

Attention: the mating surface with the valve seat must be the smooth surface of the accessory.

(b) Press the accessory gradually with table press to force the valve seat in position.

Attention:

The force exerted by the table press should not in excess, or the valve seat will be damaged.

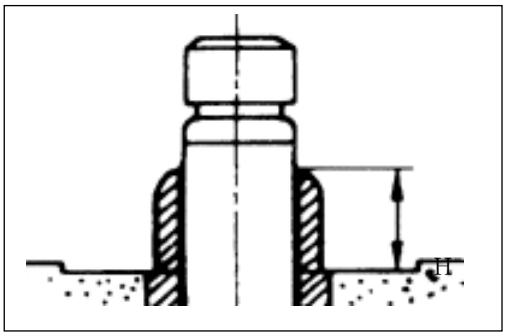

(c) Measure the installation height of valve guide pipe from one side of the cylinder cover top surface.

Height H (reference): 13mm.

Attention:

If the valve guide pipe has been disassembled, the valve and valve guide pipe must be replaced as a pair.

(2) Valve

Smear machine oil on the outer diameter of the valve rod before valve installation.

(3) Spring washer

(4) Air valve oil seal

(a) Mount new oil seal onto the valve guide pipe.

(b) Pull in it with special tool.

Valve oil seal erecter: 5-8840-2033-0

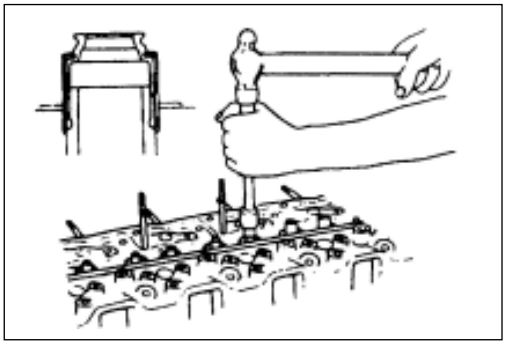

(5) Air valve spring

(a) Mount valve spring onto the spring washer.

(b) Mount valve spring seat onto the spring washer.

Notes:

- The end of the valve spring applied with paint shall be downward.
- Introduce compressed air from the preheating plug hole to the cylinder forcing valve in position.

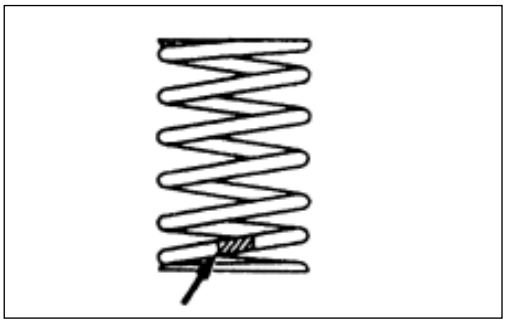

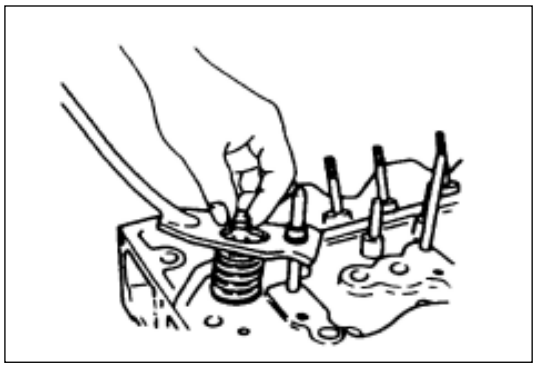

(6) Air valve door lock

(a) Press the valve spring in position with spring compressor.

(b) Mount the air valve door lock into the valve spring seat.

(c) Tap around of the door lock with rubber hammer.

Valve spring compressor: 9-8523-1423-0（J-29760）

2. Push rod

3. Rockshaft assembly

Screw down the fastening bolts of the rockshaft assembly to prescribed torque.

Tighten torque: 54N • m.

4. Preheating plug and plug link plate

Screw down the preheating plug to prescribed torque.

Tighten torque: 23N • m.

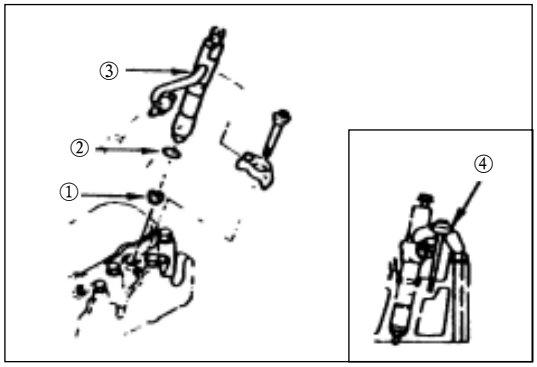

5. oil sprayer body

(a) Mount the oil sprayer sealing ring ① and O-ring ② onto the oil sprayer body ③.

Ensure that the O-ring clings the O-ring groove of oil sprayer.

(b) Apply machine oil into the hole on the cylinder cover to which oil sprayer body is mounted.

(c) Mount the oil sprayer together with its clamp plate ④ onto the cylinder cover.

Screw down the clamp plate bolts of oil sprayer to prescribed torque.

Tighten torque: 37N • m

6. Thermostat body assembly

Screw down the fastening bolts of the thermostat body assembly to prescribed torque.

Tighten torque: 19N • m

Rockshaft assembly

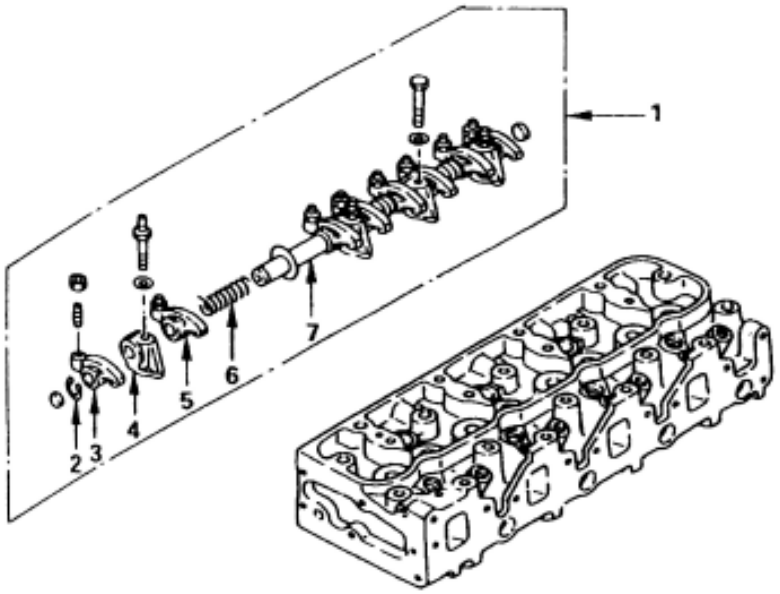

Disassembly procedure

1. rockshaft assembly
2. rockshaft elastic collar
3. rocker
4. rockshaft support
5. rocker
6. rockshaft spring
7. rockshaft

Reassembly procedure

Reassemble according to the reverse procedure of disassembly.

Disassembly

1. Rockshaft assembly
2. Rockshaft elastic collar
3. Rocker
4. Rockshaft support
5. Rocker
6. Rockshaft spring
7. Rocker

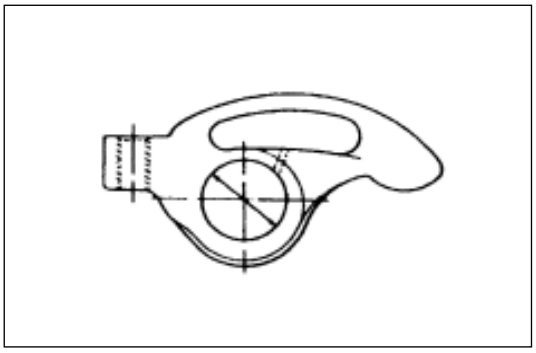

Inspection and maintenance

Parts must be adjusted, repaired or replaced when excess wear or damage are found in examination.

Oil film clearance

(a) Measure the inner diameter of the rockshaft with vernier caliper and inner diameter dial gauge.
The rockshaft must be replaced if the measurement value exceeds the prescribed limit value.

Diameter of rockshaft mm

Standard	Limit
19.036	19.100

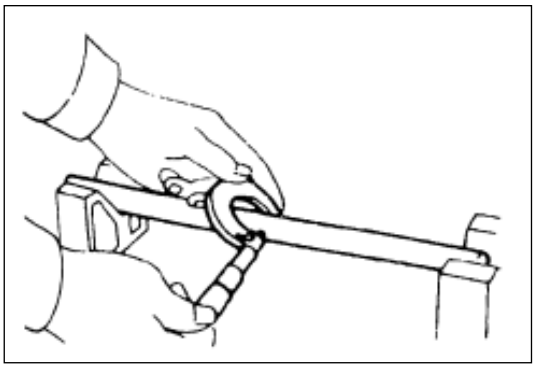

(b) Measure the outer diameter of the rockshaft with spiral micrometer at the oscillating position of the rocker.
The rocker must be replaced if the measurement value exceeds the prescribed limit value.

Diameter of rockshaft mm

Standard	Limit
18.98-19.00	18.90

Clearance between the rocker and the rockshaft mm

Standard	Limit
0.06-0.08	0.10

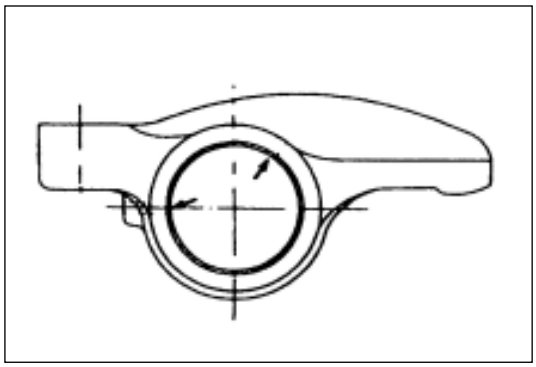

(c) Examine the oil hole of the rocker to ensure it not blocked. Sweep the oil hole of the rocker with compressed air if necessary.

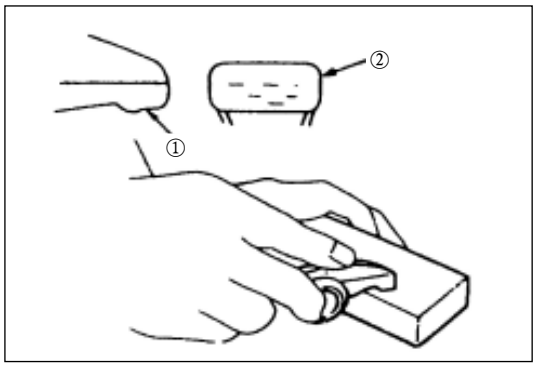

Rocker correction

Examine step abrasion ① and scoring ② condition of the contact surface of the rocker top valve rod

If there is any light step abrasion or scoring on the contact surface, rub it with oil stone.

If the step abrasion or scoring is severe, the rocker must be replaced.

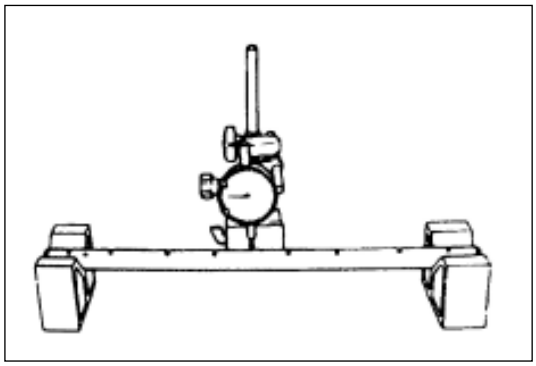

Axial/radial direction jump of the rockshaft

(a) Put the rockshaft on the V-type block.

(b) Measure the radial jump in the middle of the rockshaft with dial gauge.

If the radial jump is light, it can be corrected with table press.

The rocker must be replaced if the radial jump of rockshaft exceeds the prescribed limit value.

Limitation: 0.2mm

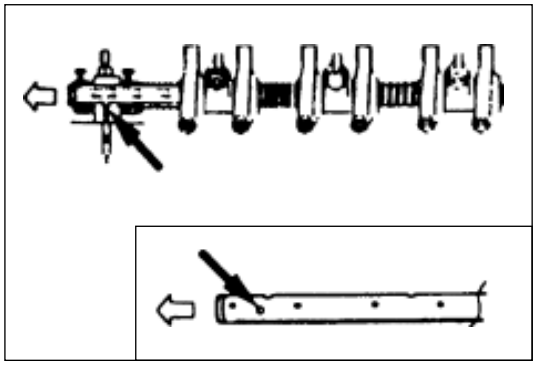

Reassembly

1. Rockshaft
   (a) Apply a thin film of oil on the rockshaft.
   (b) Mount the rockshaft, rocker, rockshaft spring and rockshaft support onto the cylinder cover together.
2. Rockshaft spring
3. Rocker
4. Rockshaft support
5. Rocker
6. Rockshaft elastic collar
7. Rockshaft assembly
   (a) Assemble the rockshaft assembly onto the cylinder cover.
   (b) Screw down the support bolts of the rockshaft to prescribed torque according to the procedure shown in the diagram.

   Tighten torque: 54N • m

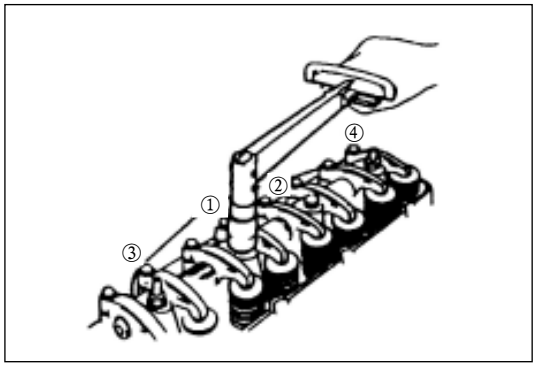

Air valve assembly

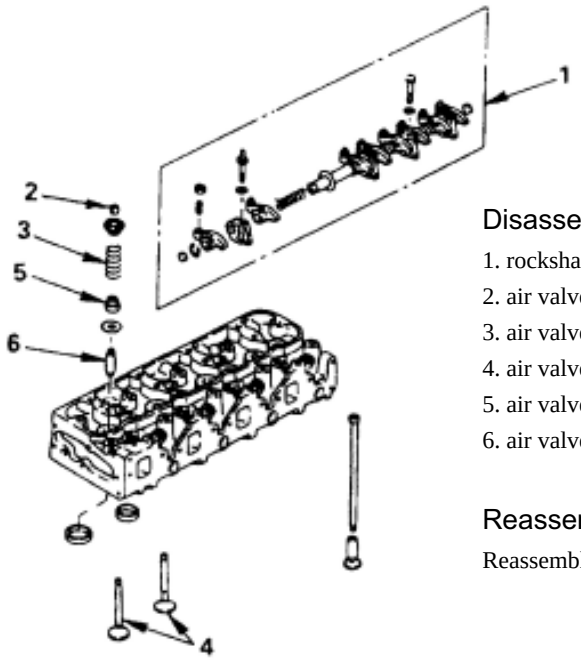

Disassembly procedure

1. rockshaft assembly
2. air valve door lock
3. air valve spring
4. air valve
5. air valve oil seal
6. air valve guide pipe

Reassembly procedure

Reassemble according to the reverse procedure of disassembly.

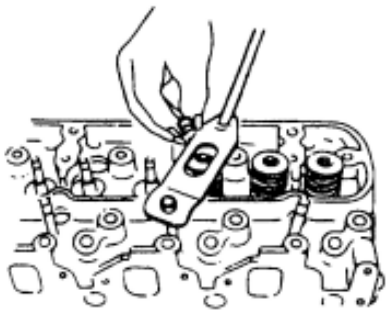

Disassembly

1. Rrockshaft assembly
2. Air valve door lock

   Press the valve spring and dismount the air valve door lock with special tool.

   Valve spring compressor: 9-8523-1423-0（J-29760）
3. Air valve spring
4. Air valve
5. Air valve oil seal
6. Air valve guide pipe

   Valve guide pipe: 9-8523-1212-0

Inspection and maintenance

Parts must be adjusted, repaired or replaced when excess wear or damage is found in examination.

Air valve spring

Attention:

Visually examine the air valve springs, replace them if there is any significant abnormal abrasion

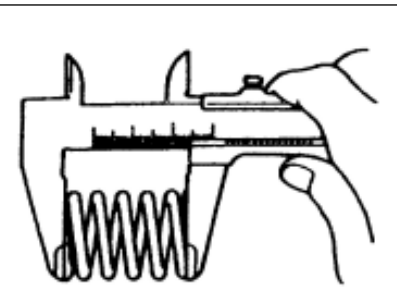

1. Free height

   Measure the free height of the spring,

   The spring must be replaced if the measurement value is under the prescribed limit value.

   Free height mm

Standard	Limit
48.0	47.1

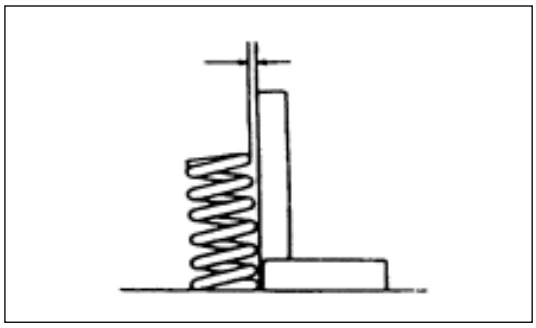

2. Verticality
   (a) Measure the verticality of the air valve spring with a right-angle steel ruler.
   (b) The air valve spring must be replaced if the measurement value exceeds the prescribed limit value.
   Limitation: 1.7mm

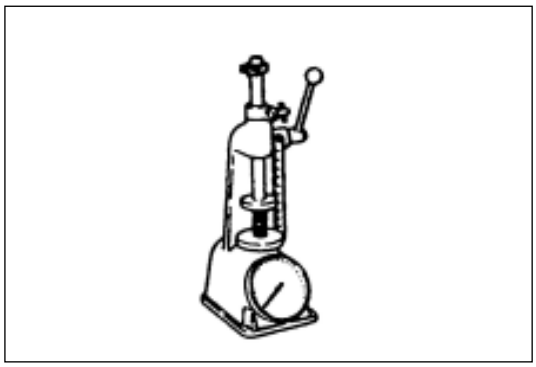

3. Spring tension
   (a) Compress the spring to its installation height with a spring testing instrument.
   Measure the tension of the compressed spring.
   (b) The air valve spring must be replaced if the measurement value is less than the prescribed limit value.

Spring tension N • m

Installation height 38.9mm	Standard	Limit
	296.2	257.9

Air valve guide pipe

Attention:

- Be careful not to destroy the contact surface of air valve seat when cleaning carbon deposition on the air valve head.
- Examine carefully abrasion and abnormal wear on the air valve rod.
- The air valve and air valve guide pipe must be replaced as a pair if there is any above mentioned condition.

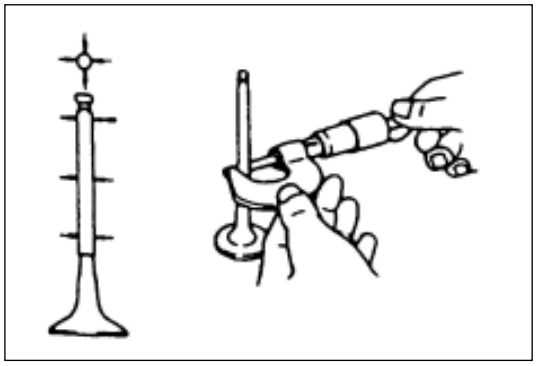

1. Air valve guide pipe gap
   (a) Measure the outer diameter of air valve rod with a spiral micrometer.
   The air valve and air valve guide pipe must be replaced as a pair if the outer diameter of air valve rod exceeds Prescribed limit.

Air valve rod diameter mm

	Standard	Limit
Air intake valve	7.946-7.961	7.880
Exhaust valve	7.921-7.936	7.850

   (b) Measure the inner diameter of air valve guide pipe with a micrometer.
   (c) Measured air valve guide pipe inner diameter subtracts measured air valve rod outer diameter.
   The air valve and air valve guide pipe must be replaced as a pair if the difference exceeds prescribed limit.

Air valve guide pipe gap mm

	Standard	Limit
Air intake valve	0.039-0.069	0.200
Exhaust valve	0.064-0.096	0.250

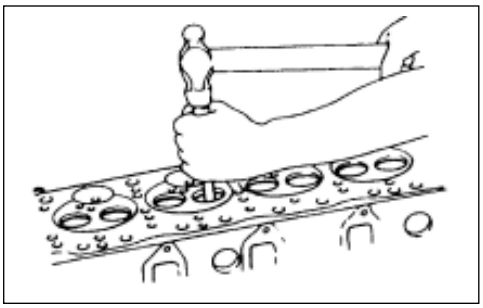

2. Replace the air valve guide pipe

(a) Knock the air valve guide pipe out of the combustion chamber use special tool.
Valve guide pipe replacer: 9-8523-1212-0

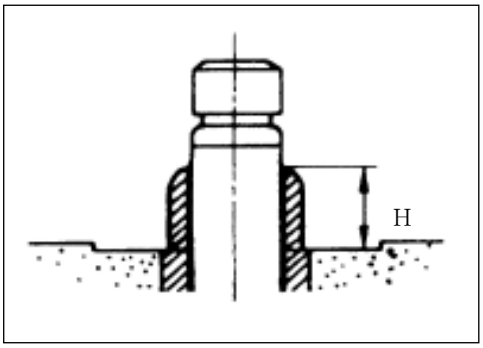

(b) Coat the air valve guide pipe outer surface with engine oil.

(c) Mount new air valve guide pipe form one side of cylinder cover top surface with special tool; examine installation height of the air valve guide pipe.
Height H: 13mm
Valve guide pipe replacer: 5-8523-1212

Attention:
If the valve guide pipe has been disassembled, the valve and valve guide pipe must be replaced as a pair.

Air valve

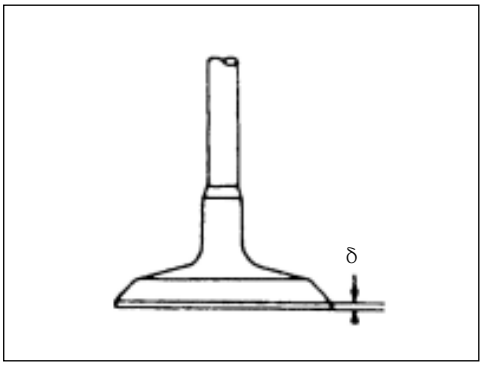

1. Air valve thickness

Measure air valve thickness
The air valve and air valve guide pipe must be replaced as a pair if the measured value is less than prescribed limit.

Air valve thickness mm

	Standard	Limit
Air intake valve	1.79	1.50
Exhaust valve	1.83	

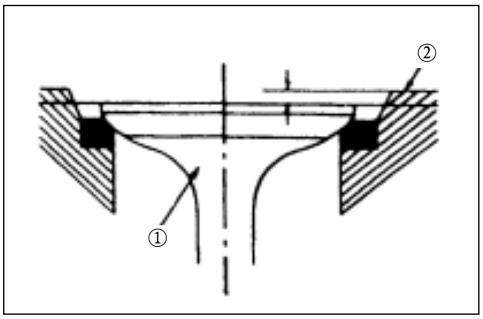

2. Air valve subsidence

(a) Mount valve ① onto the cylinder cover ②.

(b) Measure air valve subsidence at the bottom surface of the cylinder cover with depth meter or straight ruler and steel rule. The air valve seat must be replaced if the measured value exceeds the prescribed limit value.

Air valve subsidence mm

	Standard	Limit
Air intake valve	0.73	1.28
Exhaust valve	0.70	1.20

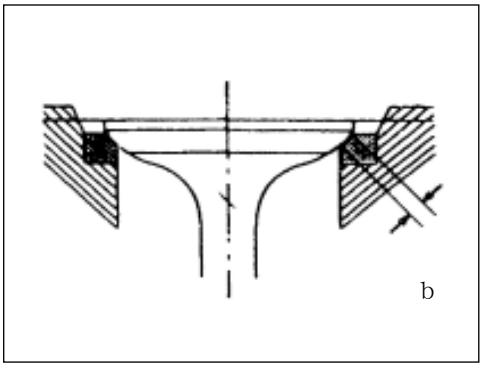

3. Air valve contact width

(a) Examine air valve contact surface roughness and plainness. The contact surface of the air valve shall be smooth.

(b) Measure air valve contact width
The air valve seat must be replaced if the measured value exceeds the prescribed limit value.

Contact width mm

	Standard	Limit
Air intake valve	1.7	2.2
Exhaust valve	2.0	2.5

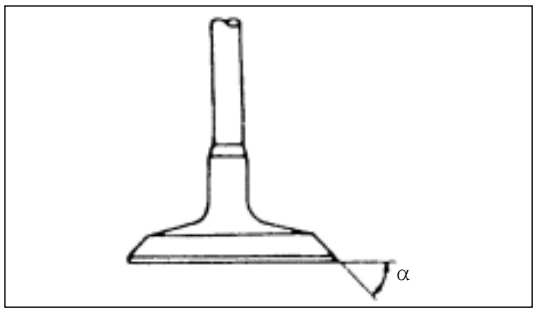

Air valve seat

1. Air valve seat contact taper-face angle
   (a) Measure the air valve seat contact taper-face angle
   (b) The air valve, air valve guide pipe and air valve seat must be replaced as a pair if the measured value exceeds prescribed limit.
   Standard value: 45°

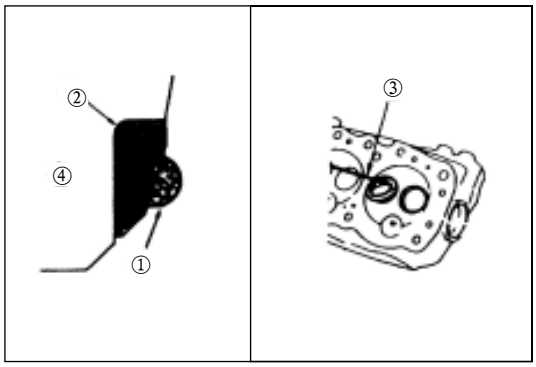

2. Disassemble air valve seat
   (a) Electric arc welding of periphery interior ① of the air valve seat ②.
   (b) Cool the air valve seat for several minutes.
   This can cause the air valve seat to shrink so that the air valve seat is easily to disassemble.
   (c) Pry the air valve seat with a screwdriver to break it off.
   Take care not to damage the cylinder cover ④.
   (d) Remove carbon deposit and other foreign matter from the air valve seat installation hole of the cylinder cover.

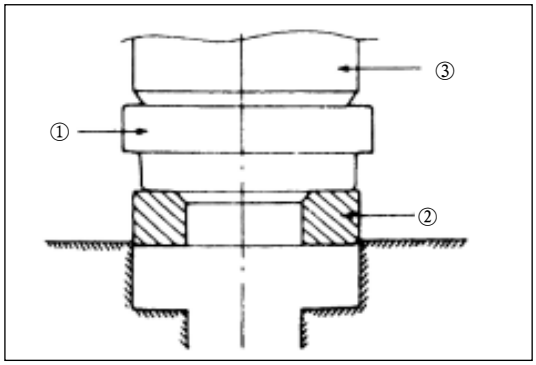

3. Air valve seat assembly
   (a) Mount the accessory ① (its outer diameter less than the valve seat) onto the valve seat ②.
   Attention:
   The accessories contact with the air valve with smooth surface.
   (b) Press the accessory gradually with table press ③ to force the valve seat in position.
   Attention:
   The force exerted by the table press should not in excess, or the valve seat will be damaged.

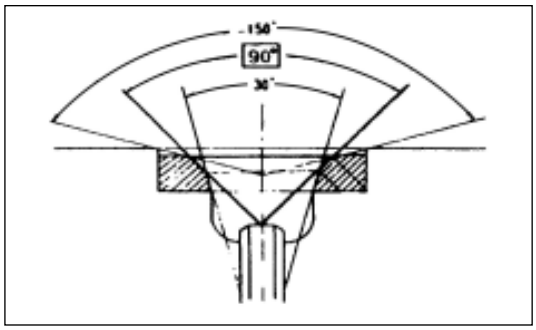

4. Air valve seat correction
   (a) Remove carbon deposit from the air valve seat surface.
   (b) Machine with air valve milling cutter (15° 45° and 75° lade) to minimize scratching and other coarse surface so that the contact width can restore standard value.
   Air valve seat angle: 45°

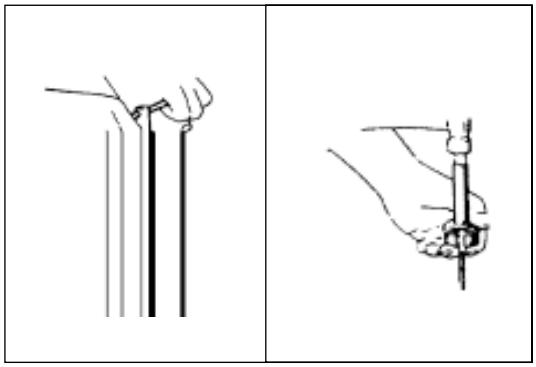

Attention:
- Wipe off only scratching and coarse surface, do not wipe off too much.
- Take care not to cut off air valve surface area without defections.
  Use adjustable air valve miller cutter guide bar.
  Sloshing of the air valve miller cutter guide bar in the air valve guide pipe is not permitted.

   (c) Coat grinding cream on the air valve seat surface.
   (d) Insert the air valve into the air valve guide pipe.

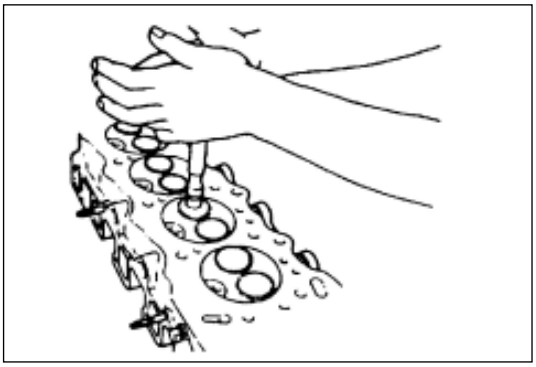

(e) Knock the air valve up and down slightly and turn the air valve at the same time to be fitted with the air valve seat.

(f) Examine if the air valve contact width is proper.

(g) Examine if the air valve seat surface can contact with overall air valve circumference.

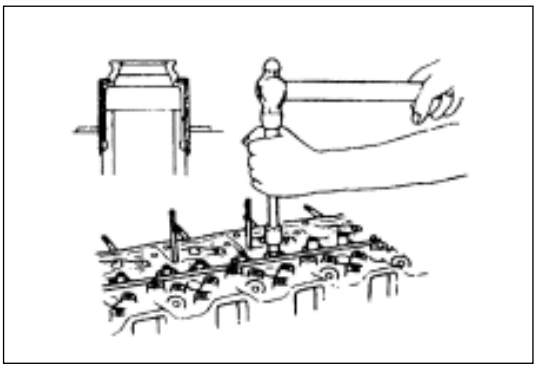

Reassembly

1. Air valve guide pipe

   (a) Coat the air valve guide pipe outer surface with engine oil.

   (b) Mount a new air valve guide pipe from one side of cylinder cover top surface with special tool.
   Valve guide pipe replacer: 9-8523-1212-0

2. Air valve oil seal

   Mount the air valve oil seal with special tool.
   Valve oil seal erecter: 5-8840-2033-0

3. Air valve

4. Air valve spring

   Mount valve spring onto the spring washer.
   The end of the spring applied with paint shall be downward.

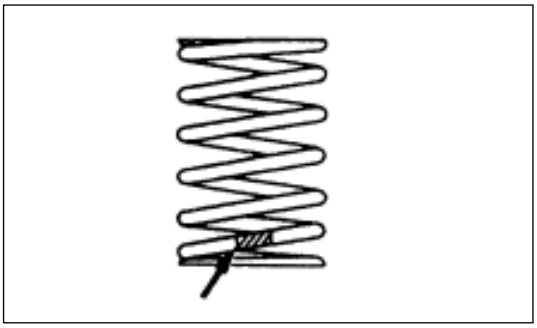

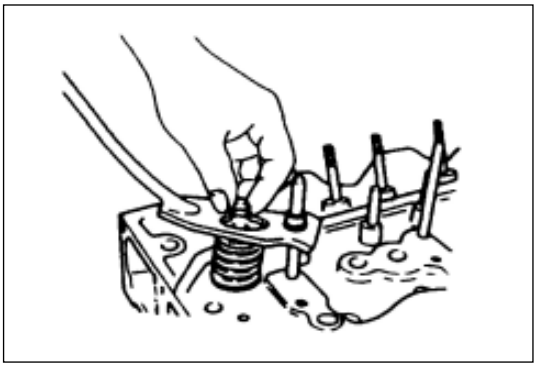

5. Air valve door lock

   (a) Press the valve spring in position with spring compressor.

   (b) Mount the air valve door lock and the valve spring seat.

   (c) Tap around of the door lock with rubber hammer.
   Valve spring compressor: 9-8523-1423-0（J-29760）

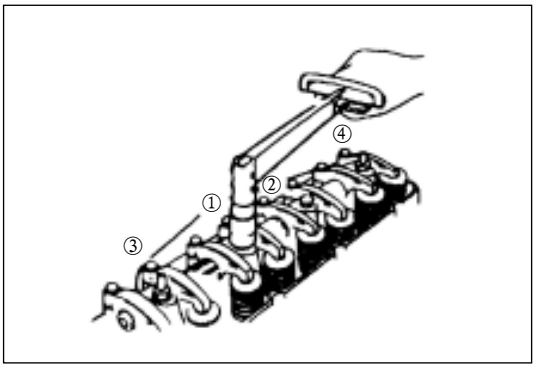

6. Rockshaft assembly

   Screw down the fastening bolts of the rockshaft assembly to prescribed torque.
   Tighten torque: 54N・m

Camshaft and transverse member

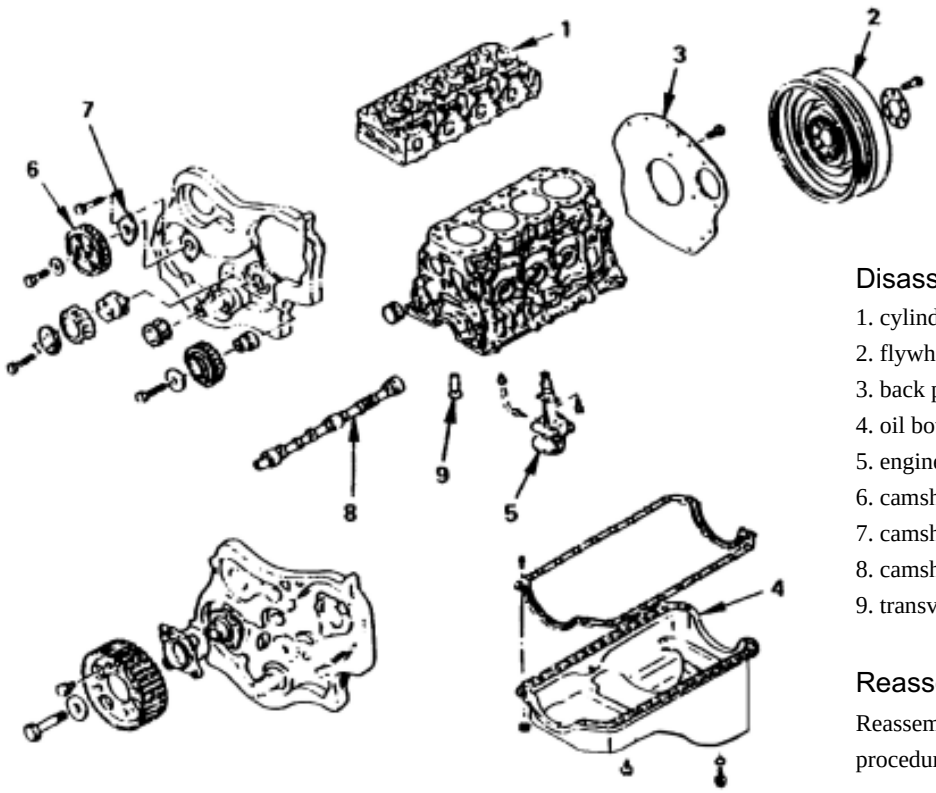

Disassembly procedure

1. cylinder cover assembly
2. flywheel
3. back plate of the machine body
4. oil bottom casing assembly
5. engine oil pump assembly
6. camshaft timing gear
7. camshaft thrust plate
8. camshaft
9. transverse member

Reassembly procedure

Reassemble according to the reverse procedure of disassembly.

Disassembly

1. Cylinder cover assembly
2. Flywheel
3. Back plate of the machine body
4. Oil bottom casing assembly
5. Engine oil pump assembly
6. Camshaft timing gear
   (a) Dismount the camshaft timing gear fixing bolts from the camshaft.

   Attention:

   Fix the camshaft to prevent it turning.

   (b) Pull camshaft timing gear ② out with general purpose puller ①.

   General purpose puller: 5-8521-0002-0（JKM-1034）

   (c) Disassembly the thrust plate ③.

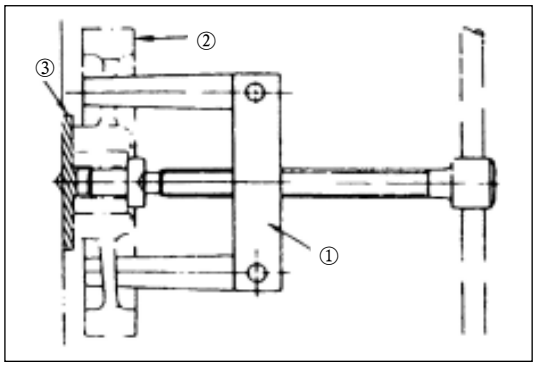

7. Camshaft thrust plate
8. Camshaft
9. Transverse member

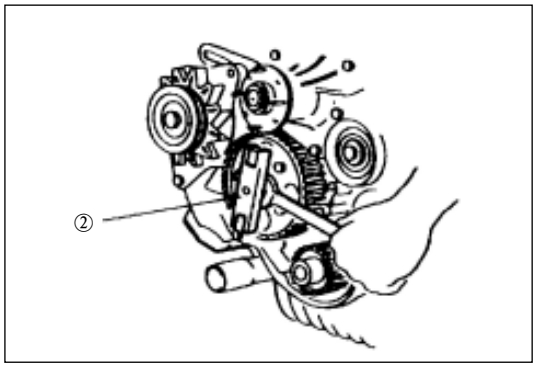

Inspection and maintenance

Parts must be adjusted, repaired or replaced when excess wear or damage are found in examination.

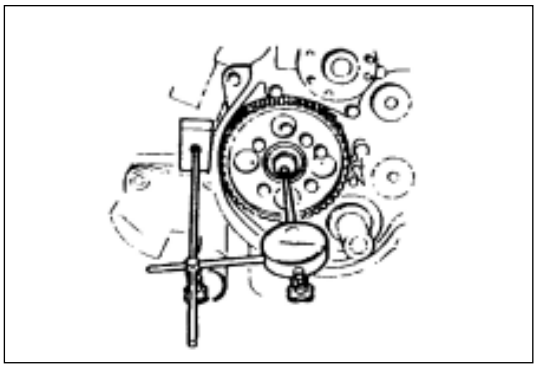

Camshaft

1. Camshaft axial clearance

Measure the camshaft axial clearance with a dial gauge.

This task must be carried out before disassembling camshaft timing gear.

The thrust plate must be replaced if the axial clearance of camshaft exceeds the prescribed limit value.

camshaft axial clearance mm

Standard	Limit
0.08	0.20

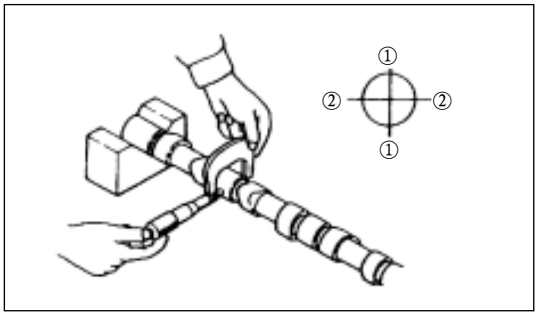

2. Camshaft outer diameter

Measure the camshaft outer diameter in two direction ① and ② with spiral micrometer.

The camshaft must be replaced if the measurement value is under the prescribed limit value.

Shaft outer diameter mm

Standard	Limit
49.945-49.975	49.600

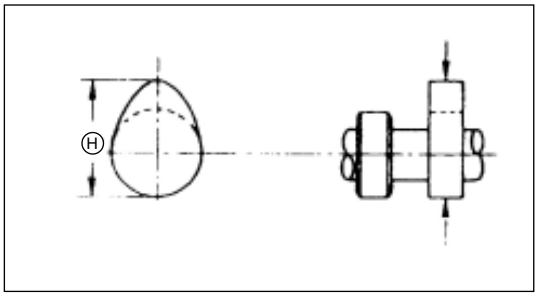

3. Cam height

Measure the camshaft height H with a micrometer.

The camshaft must be replaced if the measurement value is under the prescribed limit value.

cam height mm

Standard	Limit
42.02	41.65

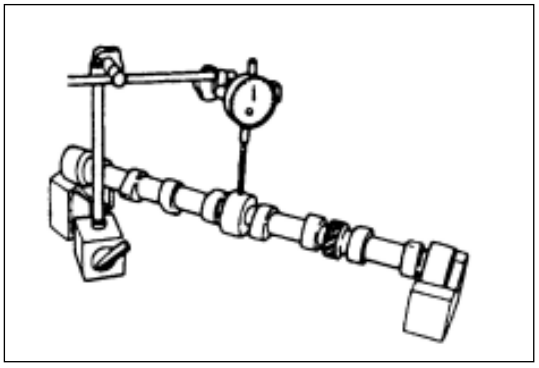

4. Camshaft radial jumping

(a) Put the camshaft on the V-type block.

(b) Measure the camshaft axial jumping with a dial gauge. The camshaft must be replaced if the measurement value exceeds the prescribed limit value.

Radial jumping mm

Standard	Limit
<=0.02	0.10

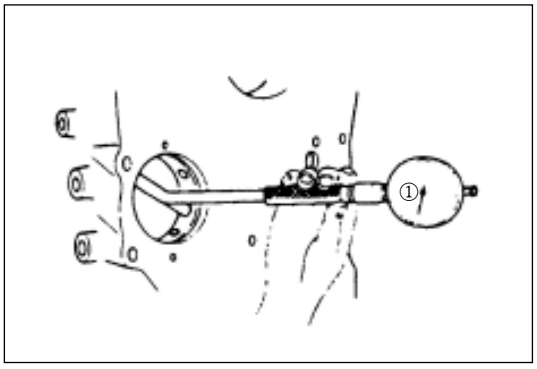

5. Camshaft bearing clearance

Measure the inner diameter of the camshaft bearing with an inner diameter micrometer.

Camshaft bearing inner diameter mm

Standard	Limit
50.00-50.03	50.08

Camshaft bearing clearance mm

Standard	Limit
0.025-0.085	0.12

The camshaft bearing must be replaced if the camshaft bearing clearance exceeds the prescribed limit value.

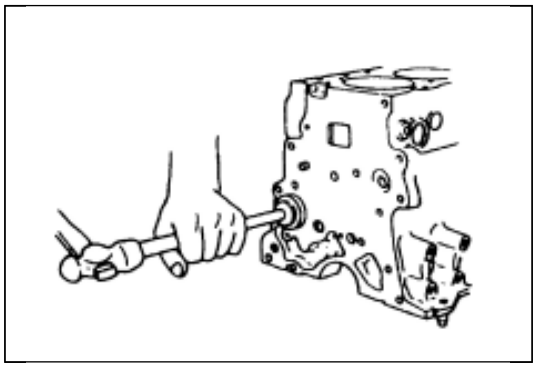

Camshaft bearing

Disassemble camshaft bearing

(a) Dismount the bowl plug of machine body.

(b) Disassemble the camshaft bearing with bearing replacer.
bearing replacer: 5-8840-2038-0

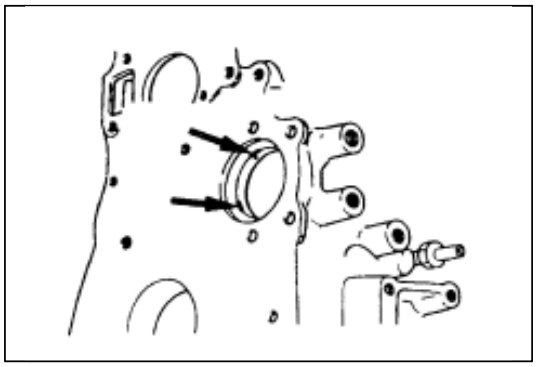

Assemble camshaft bearing

(a) Align the oil hole on the bearing with that on the engine body.

(b) Assemble the camshaft bearing with bearing replacer.
bearing replacer: 5-8840-2038-0

Transverse member

Visually examine if there is any spot corrosion, crack and other abnormal conditions on the contact surface of the transverse member and camshaft.

The transverse member must be replaced if any above mentioned occurs.

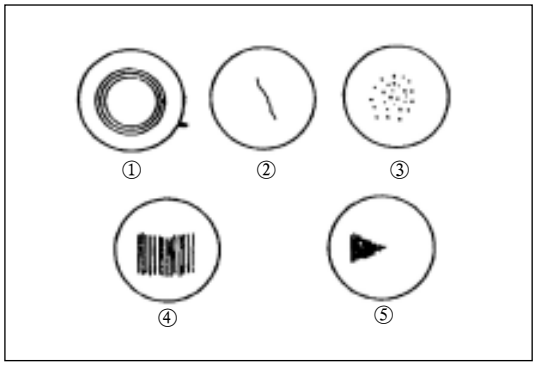

Refer to the left diagram

① normal contact

② crack

③ spot corrosion

④ abnormal contact

⑤ abnormal contact

Attention:

The transverse member surface is spherical, do not try to grind the transverse member when repairing it with oil stone or other similar tools.

The transverse member must be replaced if it is damaged.

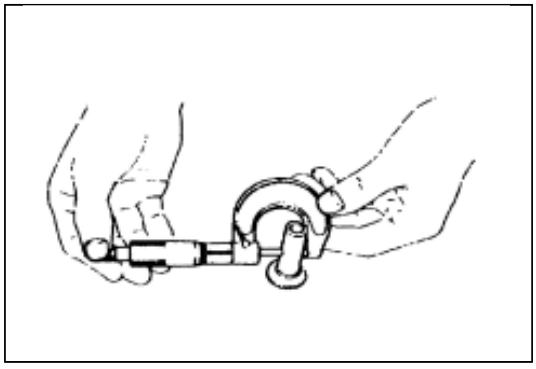

Transverse member outer diameter

(a) Measure the outer diameter of transverse member with a spiral micrometer.

The transverse member must be replaced if the measurement value is under the prescribed limit value.

Transverse member outer diameter mm

Standard	Limit
12.97-12.99	12.95

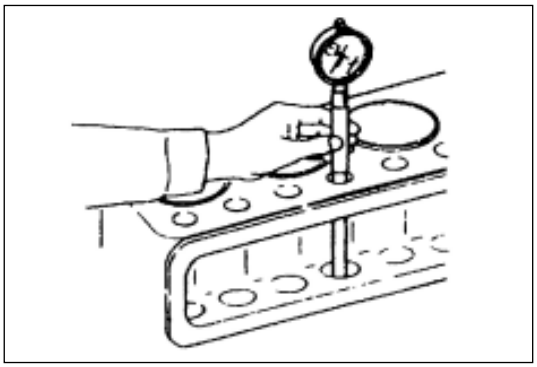

(b) Measure the inner diameter of installation hole on the transverse member, calculate for clearance.
The transverse member and/or engine body must be replaced if the gap between the transverse member and its installation hole exceeds the prescribed limit value.

Clearance between the transverse member and its installation hole mm

Standard	Limit
0.03	0.10

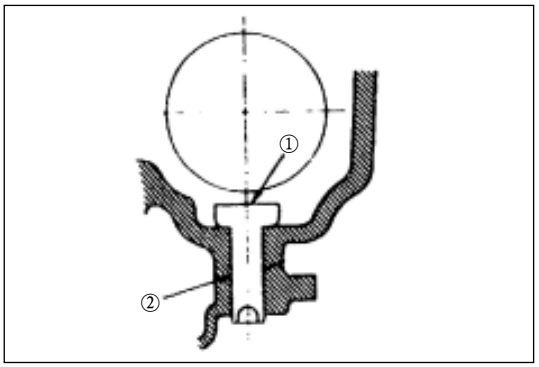

Reassembly

1. Transverse member
   (a) Apply machine oil on the surfaces of the transverse member ① and its installation hole ②.
   (b) Determine the transverse member according to the position in disassembly (if the transverse member will be reused).

   Attention:
   The transverse member must be assembled before camshaft assembly.

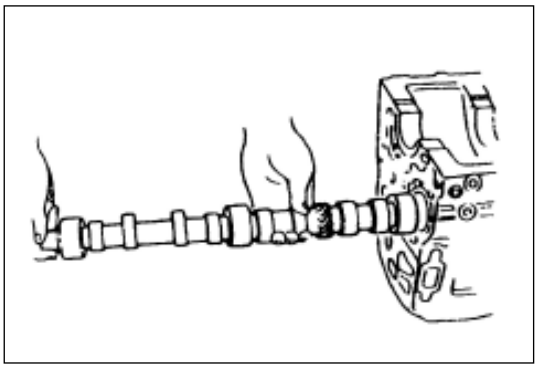

2. Camshaft
   (a) Smear the camshaft and its bearings with machine oil.
   (b) Mount the camshaft onto the engine body.
   Take care not to damage the camshaft bearings.

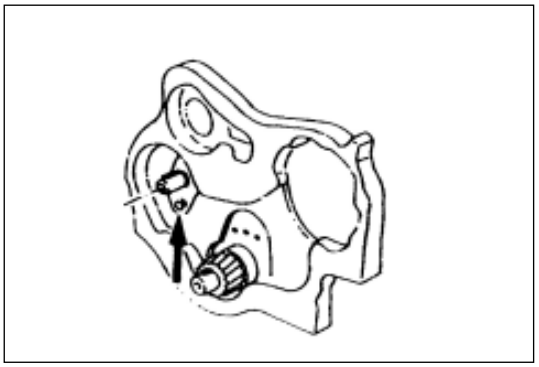

3. Camshaft thrust plate
   Install the camshaft thrust plate onto the engine body and screw down the camshaft thrust plate to prescribed torque.
   Tighten torque: 18N • m

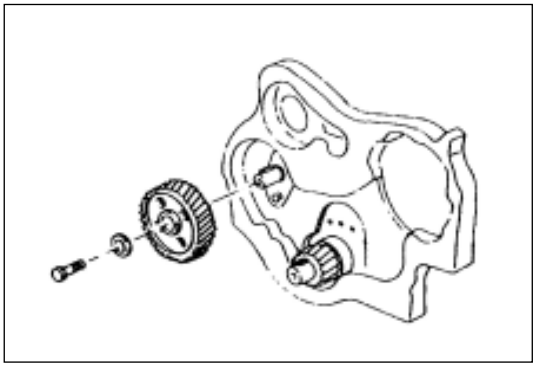

4. Camshaft timing gear
   (a) Mount the camshaft timing gear onto the camshaft.
   The mark ìY-Yî on the timing gear must face outside.
   (b) Screw down the fastening bolts of the camshaft timing gear to prescribed torque.
   Tighten torque: 85N • m

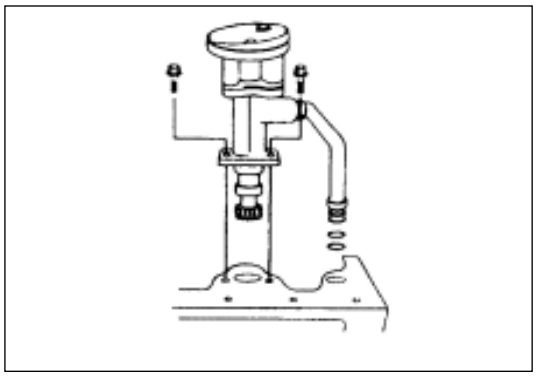

5. Engine oil pump assembly
   (a) Smear the oil pipe O-ring with engine oil and mount the O-ring into its groove in the engine body.
   (b) Install the engine oil pump assembly and the oil pipe onto the engine body and screw down the fixing bolts to prescribed torque.
   Tighten torque: 19N • M
   (c) Screw down the bush nuts to prescribed torque
   Tighten torque: 25N • M

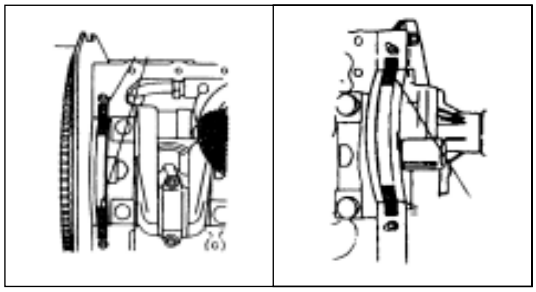

6. Oil bottom casing assembly
   (a) Oil the arc area of the fifth main bearing cover, groove and timing gear chamber arc area with recommended liquid sealant or the similar.

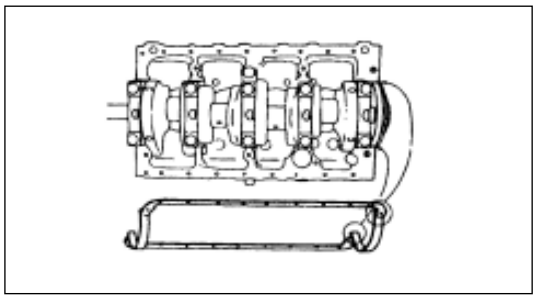

   (b) Mount the gasket back-lip into the groove in the fifth main bearing cover.
   (c) Ensure that the back-lip clings with the groove.
   (d) Mount the oil bottom case onto the engine body.
   (e) Screw down the fastening bolts of oil bottom case to prescribed torque.
   Tighten torque: 19N • m

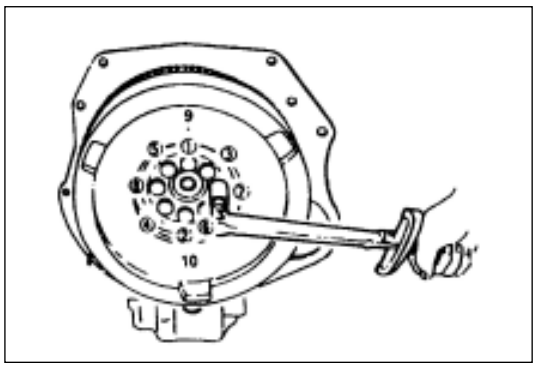

7. Back plate of the machine body
   (a) Align the fix pinhole on the back plate with that on the engine body.
   (b) Screw down the fastening bolts of the back plate to prescribed torque.
   Tighten torque: 82N • m
8. Flywheel
   (a) Coat the flywheel bolts with engine oil.
   (b) Screw down the flywheel bolts to prescribed torque by angle-screw home method in two steps.

Flywheel bolts torque N • m

First step(pre-tighten torque)	Second step(fianal torque)
59	60-90°

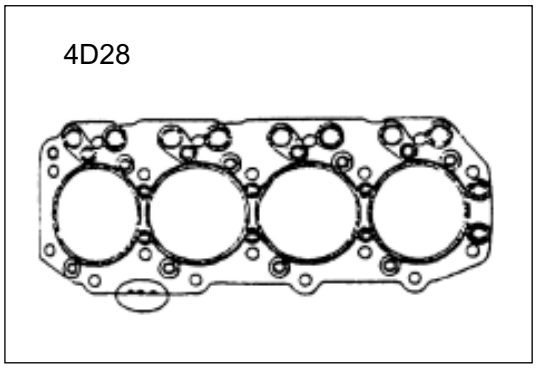

9. Cylinder cover assembly
   (1) cylinder cover gasket
   The cylinder cover gasket is determined according to the projection of the cylinder top against the engine top surface. Three different thickness gasket have been provided to improve the engine performance.
   Select a suitable gasket in the three groups according to the following procedures.
   Remove carbon deposit on top of the cylinder and the engine. Surface installed with gasket shall be cleaned also.

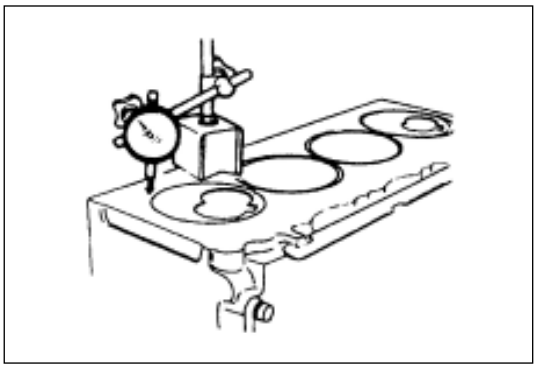

(2) Measure the piston top projection

(a) Measure the piston projection with a micrometer.

(b) Refer to the illustration for measuring position of the piston top projection.
All the measuring positions shall be as adjacent to the cylinder bush as possible.

(c) Measure the points ①②③④ and derive two differences ①-② and ③ - ④ for each cylinder.

(d) Obtain the maximum from four cylinders.

(e) The gasket group shall be selected according to the next table with above mentioned maximum.

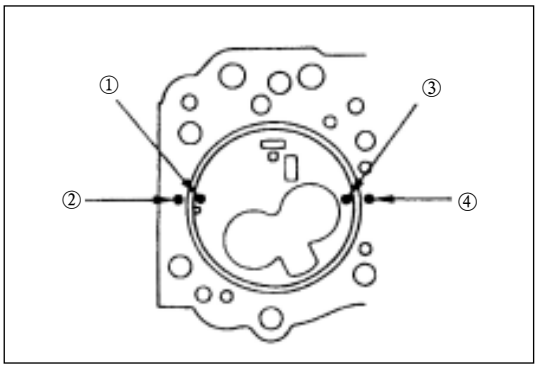

4D28 cylinder cover gasket thickness mm

Gasket No.		Piston top projection	Gasket thickness (just for reference)
(A)		0.758-0.813	1.50
(B)		0.813-0.859	1.55
(C)		0.859-0.914	1.60

Attention: Difference between the maximum and minimum of piston top projection shall not exceed 1.0mm.

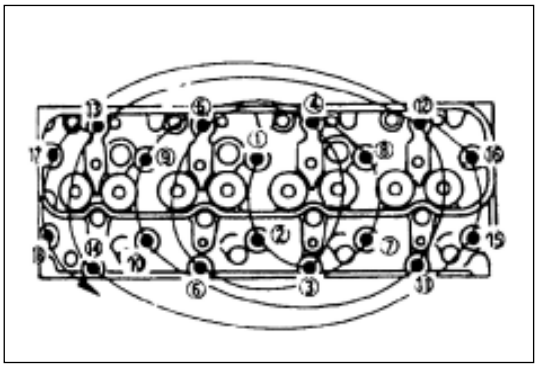

(3) cylinder cover

(a) Mount the cylinder cover fixing pin onto the engine body.

(b) The top mark shall be toward upside when mounting the cylinder cover gasket.

(c) Clean the bottom surface of the cylinder cover and top surface of the engine body.

(d) Smear machine oil on the bolt threads and mating surface of the cylinder cover.

(e) Screw down the support bolts of the cylinder cover bolts by three steps to prescribed torque according to the procedure shown in the diagram.

Cylinder cover bolts torque N • m

First step	Second step	Third step
49	60-75	60-75°

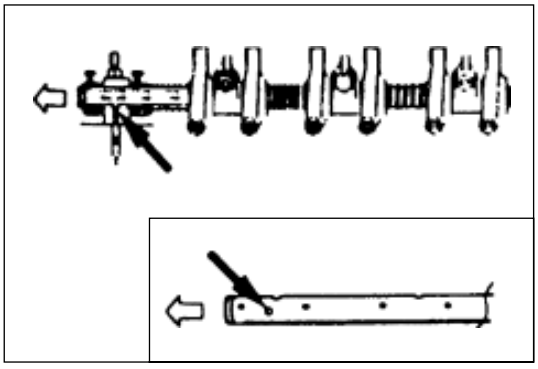

(4) Push rod
Smear the push rod with engine oil and insert it into the cylinder cover.

(5) Rockshaft assembly

(a) Loose all the adjusting screws.

(b) Assemble the rockshaft with its large engine oil hole (ϕ4) face front of the engine.

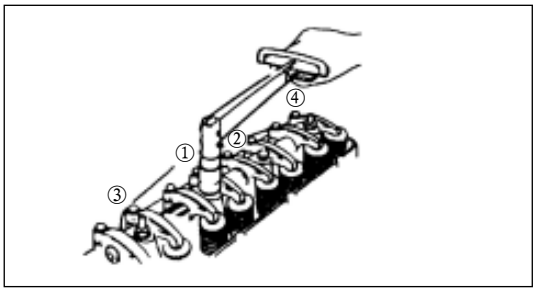

(c) Screw down the support bolts of the rockshaft to prescribed torque according to the procedure shown in the diagram.
Tighten torque: 54N • m

(d) Adjust the air valve clearance.

Crankshaft

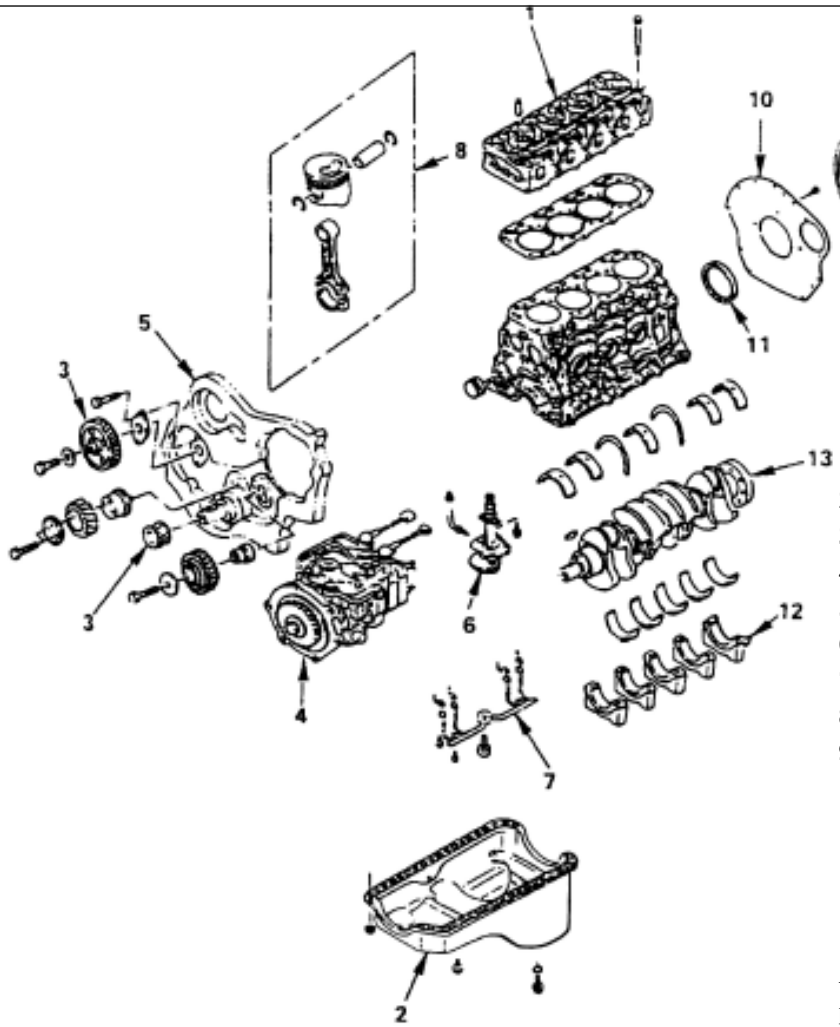

Disassembly procedure

1. cylinder cover assembly
2. oil bottom casing assembly
3. timing gear
4. injection pump assembly
5. timing gear chamber
6. engine oil pump assembly
7. piston and connecting rod assembly
8. flywheel
9. back plate of the machine body
10. back oil seal of the crankshaft
11. main bearing cover.
12. crankshaft

Reassembly procedure

Assemble according to the reverse procedure of disassembly.

Disassembly

1. Cylinder cover assembly
2. Oil bottom casing assembly
3. Timing gear
4. Injection pump assembly
5. Timing gear chamber
6. Engine oil pump assembly
7. Piston and connecting rod assembly
8. Flywheel
9. Back plate of the machine body

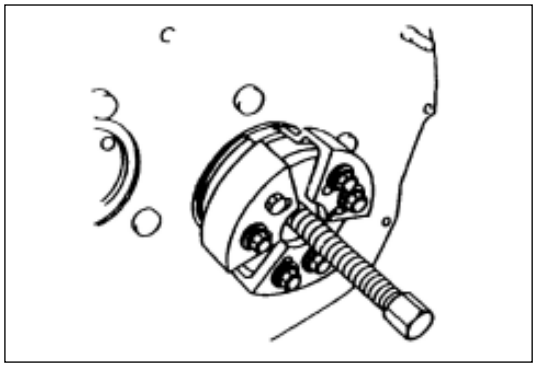

10. Back oil seal of the crankshaft

    Push the oil seal deeply, mount special tool as shown in the diagram to dismount the oil seal.

    Rear oil seal detacher: 5-8840-2360-0

    Attention:

    Take care not to damage the back plate and crankshaft seal surfaces when dismounting the oil seal.
11. Main bearing cover.
12. Crankshaft

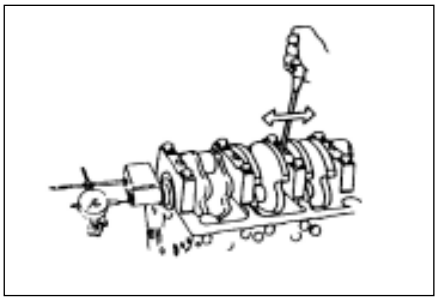

Inspection and maintenance

Parts must be adjusted, repaired or replaced when excess wear or damage is found in examination.

1. Crankshaft thrust clearance

Mount dial gauge as shown in the diagram and measure the crankshaft thrust clearance.

The thrust bearings must be replaced as a whole if thrust clearance exceeds the prescribed limit value.

crankshaft thrust clearance mm

Standard	Limit
0.10	0.30

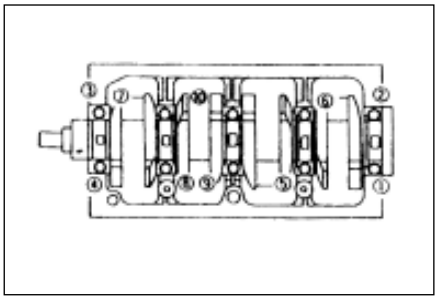

2. Camshaft main bearing clearance

(a) Remove main bearing cover gradually as shown in the diagram
Place the main bearing cover according to the cylinder serial number.

(b) Remove the crankshaft
Remove the main bearing

(c) Clean the surfaces of top/bottom bearings and crankshaft main journal.

(d) Examine if the main bearing is damaged or excessively worn.
The main bearings must be replaced as a group when excess wear or damage is found in examination.

(e) Assemble the top bearing and thrust washer to their original positions.
Mount the crankshaft carefully.

(f) Mount the bottom bearing onto the main bearing cover of original position.

(g) Place a plastic line gap gauge onto the crankshaft main journal.

(h) Mount the main bearing cover.
Smear machine oil on the bolt threads and mating surface of the main bearing cover, screw down the main bearing cover bolts to prescribed torque.
Tighten torque: 167N・m

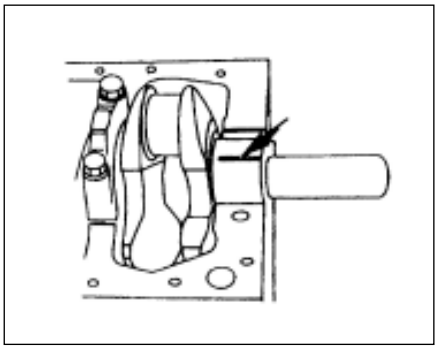

Attention:

Crankshaft rotation is not permitted.

(i) Remove the main bearing cover.

(j) Measure the width of the plastic line gap gauge and determine oil film gap.
Main bearings and/or crankshaft must be replaced as a whole if oil film clearance exceeds the prescribed limit value.

(k) Erase the plastic line gap gauge from the main bearing and crankshaft.

(l) Remove the crankshaft and main bearing

Oil film clearance mm

Standard	Limit
0.035-0.080	0.11

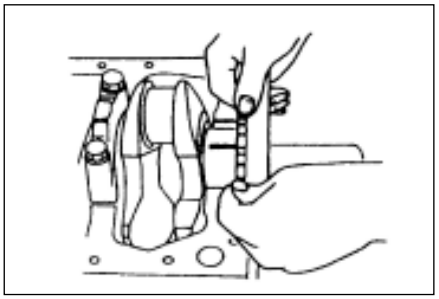

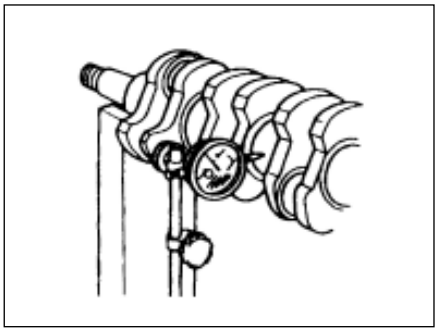

3. Radial jump of the camshaft

(a) Place the crankshaft carefully on the V-block
Turn the crankshaft slowly and measure its radial jumping.
The crankshaft must be replaced if the radial jump of crankshaft exceeds the prescribed limit value.

Radial jumping mm

Standard	Limit
<=0.05	0.08

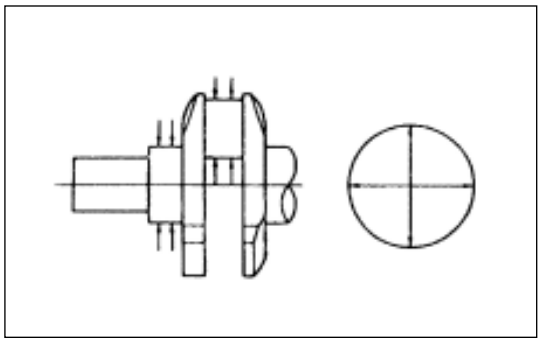

(b) Measure the diameter and non-uniform wear of the crankshaft main journal and the crankpin.
The crankshaft must be replaced if non-uniform wear of the crankshaft exceeds the prescribed limit value.

mm

	Standard	Limit
Main journal diameter	69.917-69.932	69.91
Connecting rod journal diameter	52.915-52.930	52.90
non-uniform wear	0.05 or leass	0.08

4. Crankshaft examination

(a) Examine if there is any excessive wear or damage of the crankshaft main journal and the crankpin surfaces.
(b) Examine if there is any excessive wear or damage on the oil seal mating surface.
(c) Examine if there is any blockage in the oil hole.

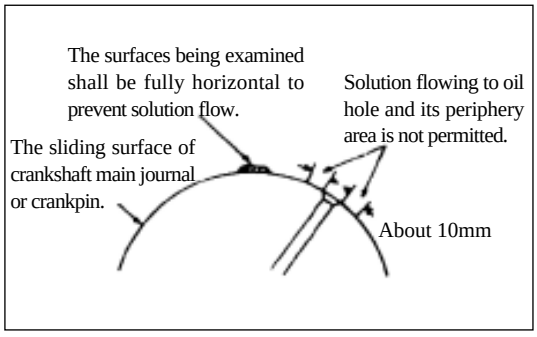

5. Crankshaft soft nitriding examination

(a) Clean the crankshaft thoroughly with a kind of organic substance.
There should be no oil trace on the surfaces being examined.
(b) Prepare ammonium chloride copper solution of 5%-10% concentration (dissolved in distilled water)
(c) Smear the solution onto the surfaces being examined with injector.

The surfaces being examined shall be fully horizontal to prevent solution flow.

Attention: Solution flowing to oil hole and its periphery area is not permitted.

(d) Test
(1) Wait for 30 to 40 minutes.
If the surface color does not change for 30 to 40 minutes, then the crankshaft can be applied.
The crankshaft must be replaced if the surface being tested changes color (to cooper color).
(2) Wash the crankshaft surface with steam immediately after the test has been completed.

Attention:
Ammonium chloride copper solution is highly corrosive.
So, it is absolutely necessary to wash surface being tested immediately after the test has been completed.

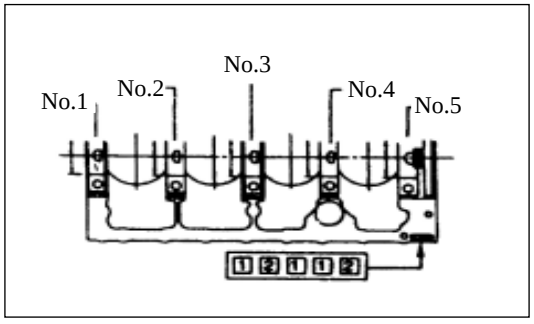

6. Camshaft bearing selection

Please refer to the following selection table when assembling a new camshaft bearing or replacing the old bearing.
Pay attention to diameter dimension marks on the engine body journal hole ① and the camshaft main journal ②when selecting and installing new camshaft bearings.

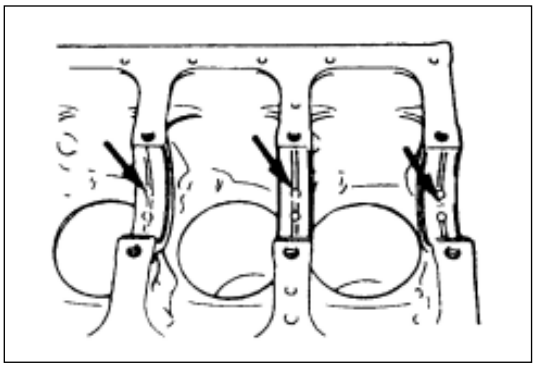

Attention:

Pay attention to distinguish top bearing (engine body side) form bottom bearing (main bearing cover side) of the main journal even though there are oil groove and hole on the main journal top bearing (engine body side) and not on the main journal bottom bearing (main bearing cover side).

Diameter of main bear (mm)		Diameter of main journal of crankshaft (mm)		Dimension mark of crankshaft bearing	Oil film clearance (mm)
Dimension mark	Inside diameter	Dimension mark	Inside diameter		
1	73.987-74.000	1 or –	69.927-69.942	Black	0.035-0.061
		2 or –	69.922-69.927	Blue	0.032-0.058
		3 or –	69.917-69.922		0.063-0.087
2	73.975-73.987	1 or –	69.927-69.942	Green	0.031-0.056
		2 or –	69.922-69.927		0.036-0.048
		3 or –	69.917-69.922	Black	0.033-0.058

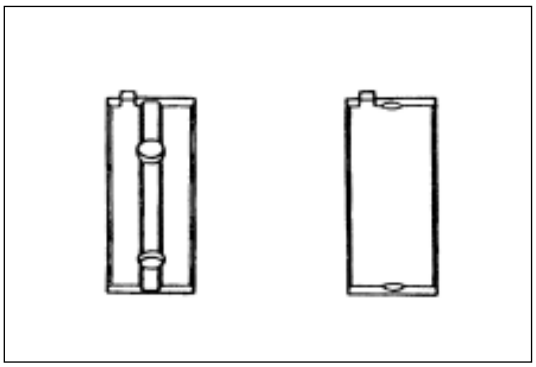

Reassembly

1. Crankshaft
   (a) Mount the main bearing onto the engine body and main bearing cover.
   Ensure their proper positions.
   (b) Coat the top/bottom main bearing surfaces with engine oil.
   (c) Mount the crankshaft carefully.
   (d) Coat the thrust washer with engine oil.

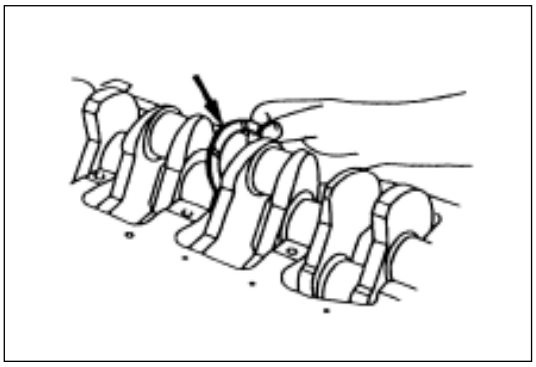

   (e) Mount the thrust washer into the washer groove of the third main journal.Oil groove in the thrust washer must face the crankshaft.

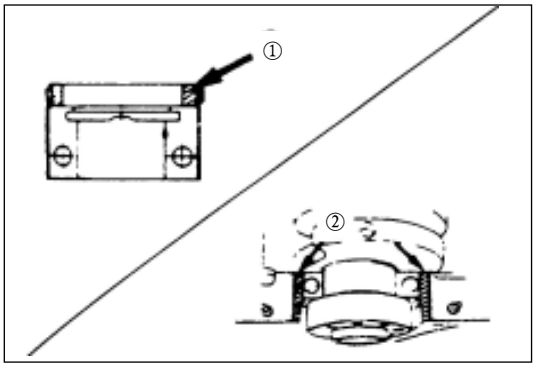

2. Main bearing cover.
   (a) Coat the fifth bearing cover ① with recommended liquid sealant and the similar as shown in the diagram.
   (b) Mount the arc gasket ② into the groove in the fifth main bearing cover.

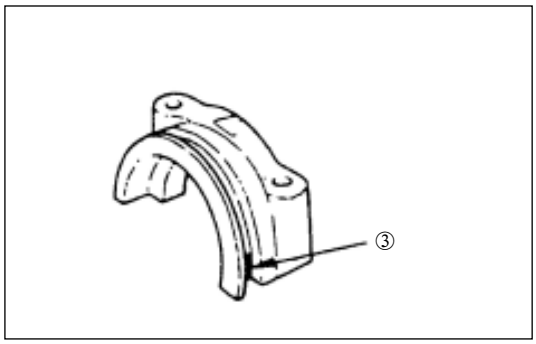

(c) Coat the fifth bearing cover ③ with recommended liquid sealant and the similar as shown in the diagram.

Attention:

Ensure there is not any oil dust on the bearing cover mating surface before coating liquid sealant. Cylinder screw thread hole and bearing blockage by liquid sealant is not permitted.

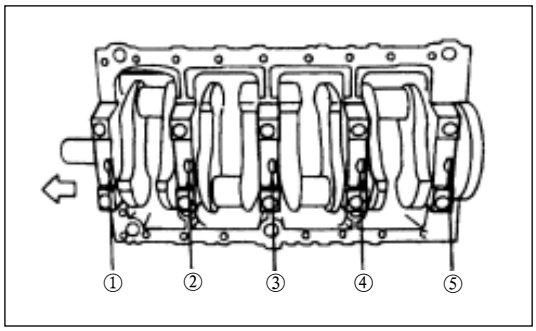

(d) Mount main bearing cover, the arrow mark on top of the main bearing cover shall face front of the engine.

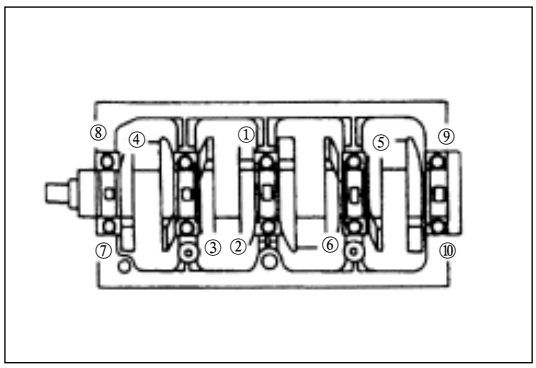

(e) Smear new machine oil on the mating surface of bolts and threads of main bearing cover.

(f) Screw down the main bearing cover bolts gradually for several times to prescribed torque according to the order number shown in the diagram, each for a little.

Tighten torque: 167N • m

Attention:

Turn the crankshaft by hand to examine if the crankshaft rotates freely.

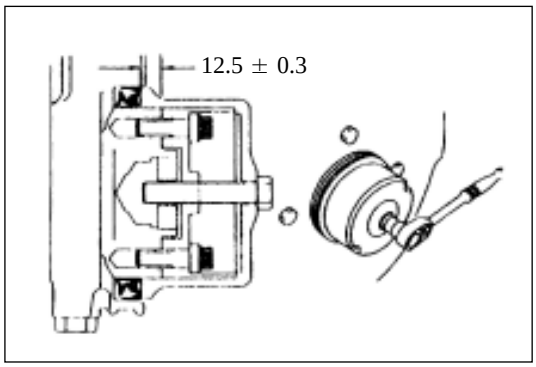

3. Back oil seal of the crankshaft

(a) Mount the crankshaft rear oil seal onto the engine body with an oil seal erector.

rear oil seal erecter: 5-8840-2359-0

Attention:

Clean rust and scrap of oil seal pressing part.

Pay attention to oil seal press in direction.

(b) Fix the connector of the special tool to the end of the crankshaft with two bolts.

(c) Mount the oil seal onto outer periphery of the joint.

(d) Insert the bush into the joint, screw down the bolts（M12 × 1.75，L=70）until the joint end surface contacts with the bush.

(e) Remove the joint and bush.

(f) Examine the installation dimension of oil seal after it has been installed.

Standard value: (12.2-12.8)mm.

4. Back plate of the machine body

5. Flywheel

(see page EM-17)

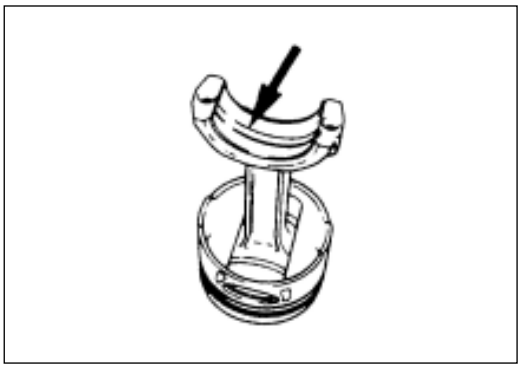

6. Piston and connecting rod assembly
   (a) Mount the connecting rod bearing onto the connecting rod body and its bearing cover.
   (b) Smear the cylinder bush hole, connecting rod bearing and the crankpin with new engine oil.
   (c) Examine if the opening position of piston ring is correct.

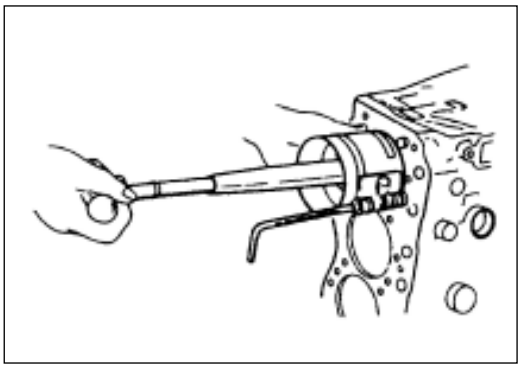

   (d) Mount the piston and connecting rod assembly into the cylinder with a piston ring compressor.
   Place the piston and connecting rod in position, the front marks on top of the piston and connecting rod must face the direction of engine.

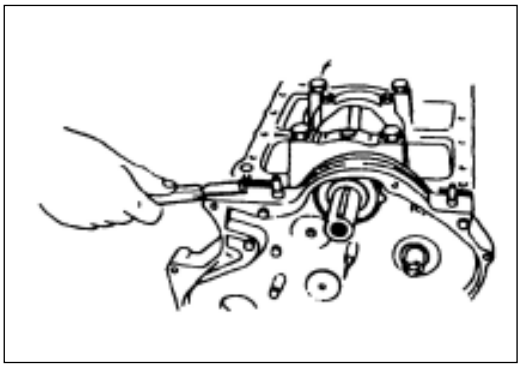

7. Engine oil pump assembly
   (See page EM-17)
8. Timing gear chamber
   (a) Mount the timing gear chamber onto the engine body.
   Attention:
   Take care not to twist front oil seal.
   (b) Screw down fixing bolts of the timing gear chamber and its gasket to prescribed torque.
   Tighten torque: 19N • m
   (c) Cut off the projection part on the gasket of joint surface.

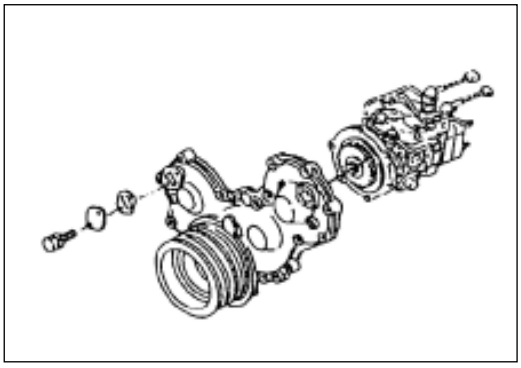

9. Injection pump assembly
   (a) Install examination whole covers on the camshaft gear side in gear chamber, timing gear side of oil injection pump.
   (b) Turn the crankshaft clockwise and examine if the TDC scratch in the crankshaft pulley aligns with the pointer. Put the piston in the first cylinder to compression travel top dead point.
   (c) Examine if the mark ìOî scratch on the camshaft timing gear aligns with the pointer in the inspection hole through inspection hole on the camshaft timing gear side.
   (d) On above mentioned conditions, align the mark ìOî of oil injection pump with the inspection hole pointer and mount oil injection pump assembly.
   (e) Mount the fastening bolts of the oil injection pump assembly and screw down to prescribed torque.
   Tighten torque: 20N • m

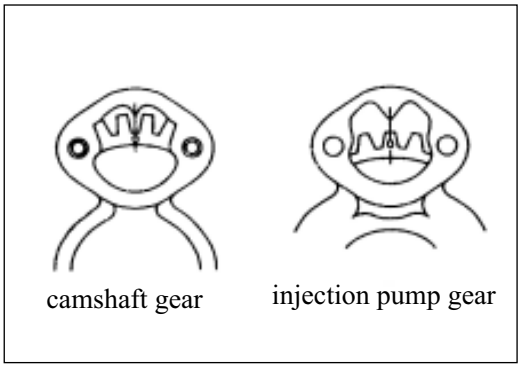

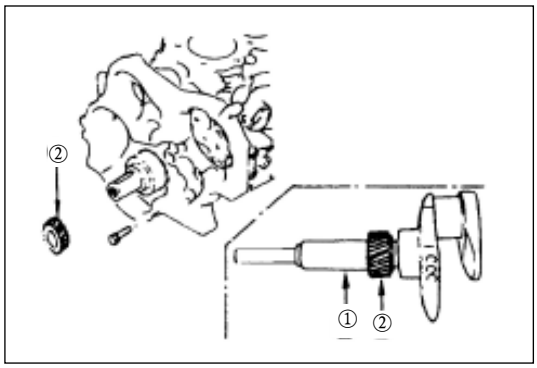

10. Timing gear

(1) Crankshaft timing gear

Mount the camshaft timing gear ② with camshaft erector ①. The mark "X-X" on the camshaft timing gear must face outside.

Camshaft gear erecter: 9-8522-0020-0

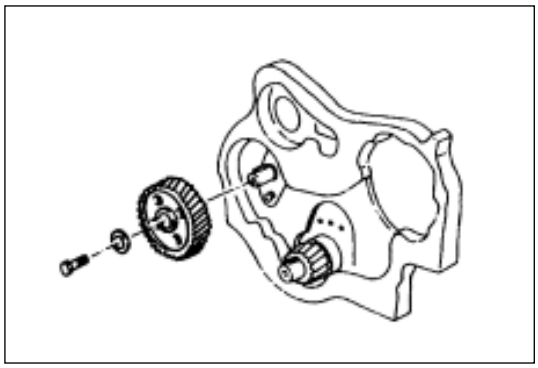

(2) camshaft timing gear

(a) Install the camshaft thrust plate onto the engine body and screw down the camshaft thrust plate to prescribed torque.

Tighten torque: 18N • m

(b) Mount the camshaft timing gear onto the camshaft. The mark "Y-Y" on the camshaft timing gear must face outside.

(c) Screw down the fastening bolts of the camshaft timing gear to prescribed torque.

Tighten torque: 85N • m

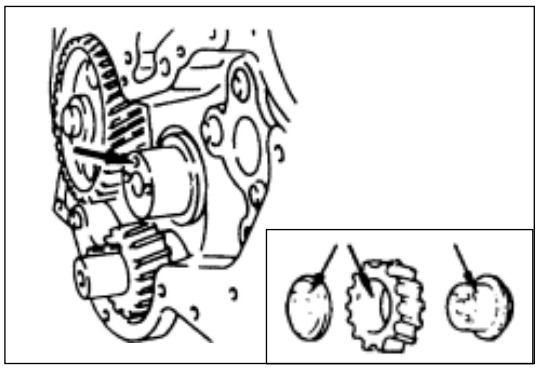

(3) Idle gear "A"

(a) Smear the idle gear and its shaft with machine oil. Oil hole of idle gear shaft must face upward.

(b) Positioning mark "X" and "Y" on the idle gear "A" shall be installed facing front of the engine.

(c) Positioning mark "X" of the idle gear shall align the positioning mark "X-X" of the camshaft timing gear ①. Positioning mark "Y" of the idle gear shall align the positioning mark "Y-Y" of the camshaft timing gear ②.

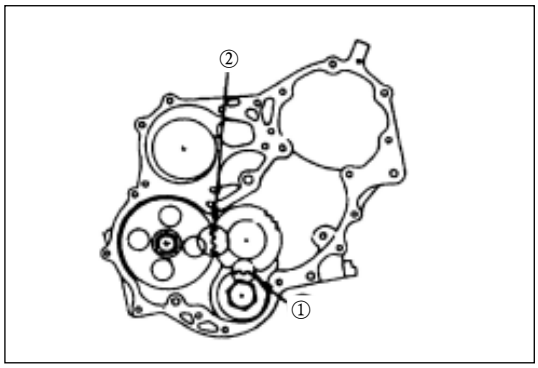

(d) Mount the thrust ring onto the engine body. The oil hole of thrust ring must face upward and the chamfer must face outside.

(e) Screw down the fastening bolts of the idle gear "A" to prescribed torque.

Tighten torque: 19N • m

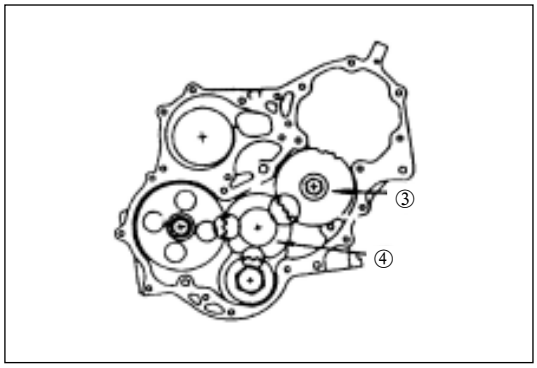

(4) Idle gear "B" and its shaft

(a) Smear the idle gear and its shaft with machine oil.

(b) Positioning mark "Z" of the idle gear "B" ③ shall align with the positioning mark "Z-Z" of the idle gear "A" ④.

(c) Screw down the fastening bolts of the idle gear "B" to prescribed torque.

Tighten torque: 76N • m

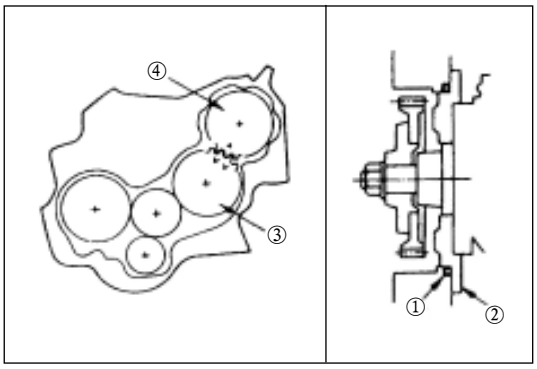

(5) Injection pump

(a) Mount the O-ring ① onto oil injection pump flange ②.

(b) Mount the oil injection pump onto the timing gear chamber. Align the positioning mark "V-V" of the idle gear "B" ③ with the mark "V" of the o il injection pump timing gear "A" ④.

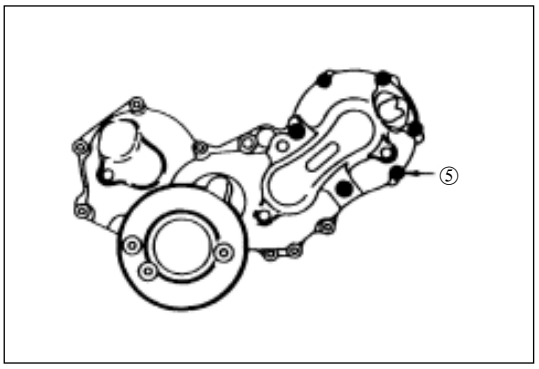

(c) Screw down six oil injection pump bracket bolts ⑤ temporarily.
Screw down oil injection pump bracket bolts after screwing down oil injection pump rear bracket bolts.

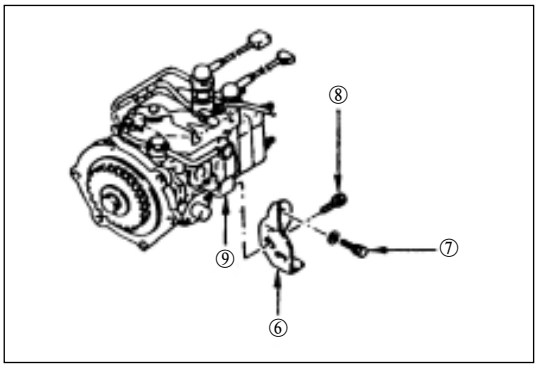

(d) Mount oil injection rear bracket ⑥ and its bolts ⑦ onto the engine body.
Mount the rear bracket bolts ⑧ onto the oil injection pump bracket ⑨.
screw down the rear bracket bolts ⑦ and ⑧ to prescribed torque.
Tighten torque: 19N • m

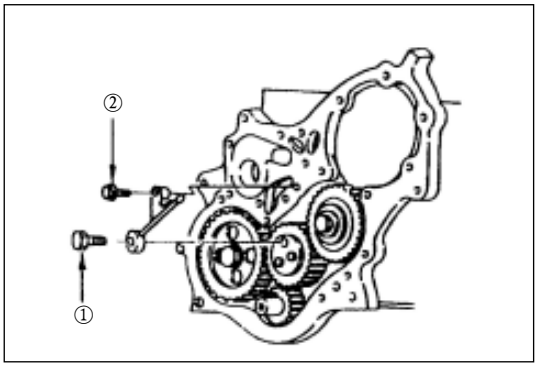

(6) Timing gear engine oil pipe

(a) Mount the oil pipe onto the timing gear chamber and the idle gear "A".

(b) screw down the eye bolts ① and fixing bolts ② of oil pipe to prescribed torque.
Screw down torque of oil pipe eye bolts is: 13N • m
Screw down torque of oil pipe fixing bolts is: 19N•m

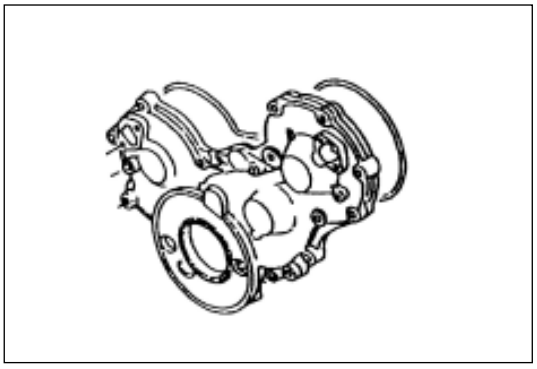

(7) Timing gear chamber cover

(a) Align the gear chamber cover with timing gear chamber positioning pin and then mount the gear chamber cover.

(b) Screw down the fastening bolts of the gear chamber cover to prescribed torque.
Tighten torque: 19N • m

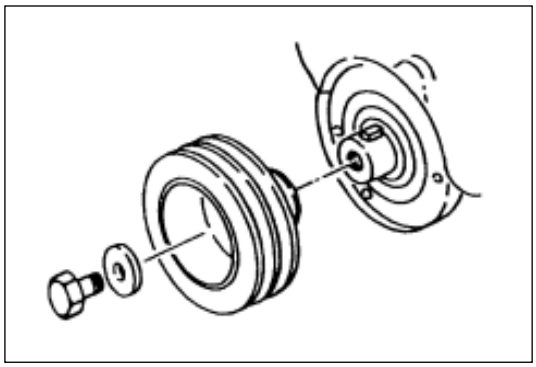

(8) Crankshaft vibration absorber pulley

Screw down the fastening bolts of the crankshaft vibration absorber pulley to prescribed torque.

Tighten torque: 206N • m

Attention:

Crankshaft rotation shall be prevented when screwing down the fastening bolts of the crankshaft vibration absorber pulley.

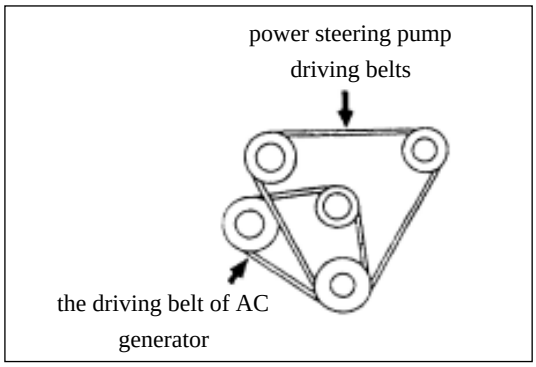

(9) AC electric generator and power steering pump driving belts

(a) Mount the driving belt of AC generator and power steering pump, adjust their tensity.

(b) Press the middle of the driving belt with 98N force.

Driving belt deflection: (8-12) mm.

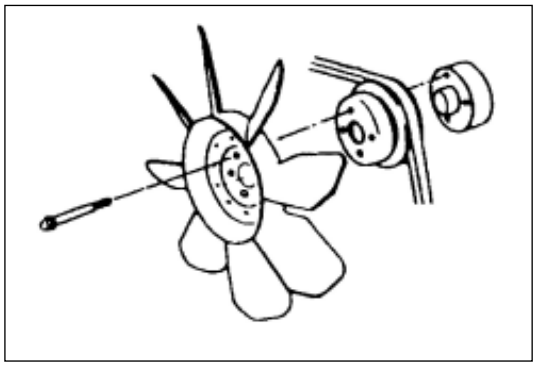

(10) Cooling fan assembly

Mount the fan pulley and cooling fan assembly onto the water pump and screw down the locknuts to prescribed torque.

Tighten torque: 8N • m

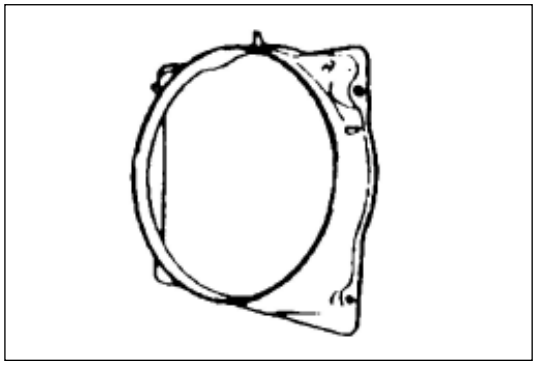

(11) Fan air guide shield

(a) Mount the fan air guide shield and water overflow tank hose.

(b) Charging coolant

(c) Start the engine and check if there is any coolant leakage.

11. Oil bottom casing assembly
(See page EM-17)

12. Cylinder cover assembly
(See page EM-17)

Piston and the connecting rod assembly

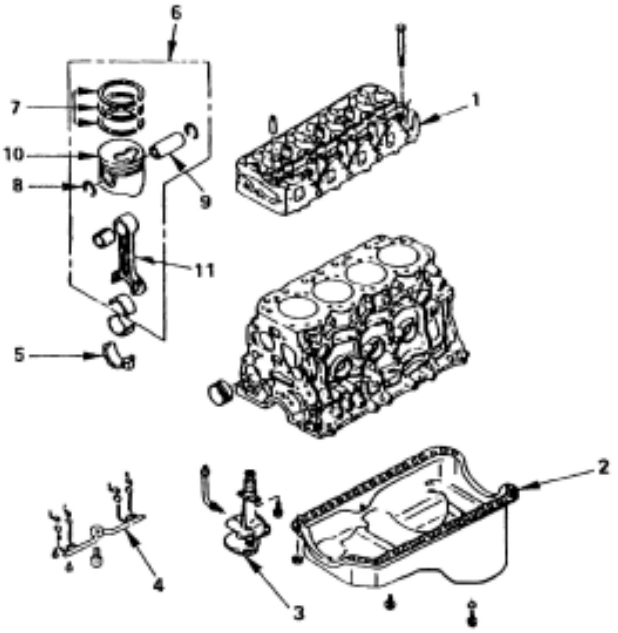

Disassembly procedure

1. cylinder cover assembly
2. oil bottom casing assembly
3. engine oil pump assembly
4. connecting rod bearing cover
5. piston and connecting rod assembly
6. piston ring
7. retaining ring of the piston pin
8. piston pin
9. piston
10. connecting rod

Reassembly procedure
Assemble according to the reverse procedure of disassembly.

Disassembly

1. Cylinder cover assembly
2. Oil bottom casing assembly
3. Engine oil pump assembly
4. Connecting rod bearing cover
5. Piston and connecting rod assembly
   Scrape the carbon deposit on the cylinder wall with scraper before removal of piston and the connecting rod assembly.

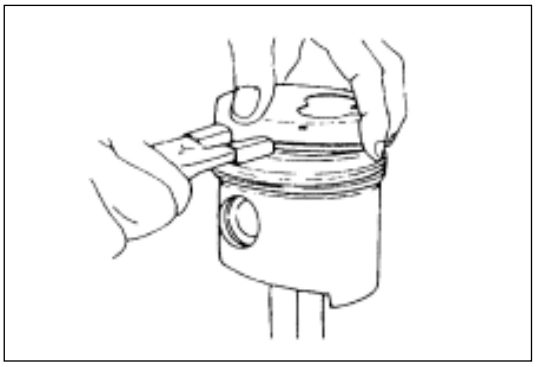

6. Piston ring
   Dismount the piston ring with a piston ring extender.
   Place the piston ring according to the cylinder serial number.

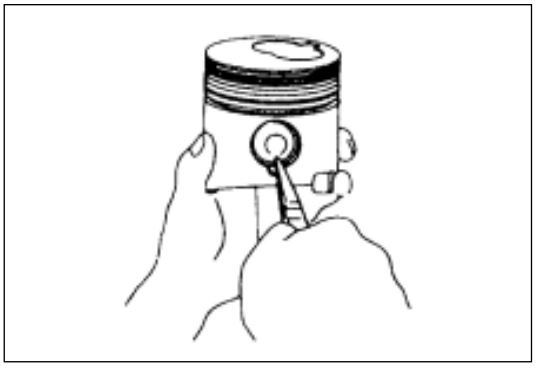

7. Retaining ring of the piston pin
   Remove the retaining ring of the piston pin with a nipper plier.
8. Piston pin
   Attention:
   Place the parts dismounted from each cylinder by order. All of the parts must be reassembled to their original positions when reassembly.
9. Piston
10. Connecting rod

Inspection and maintenance

1. Piston

(a) Remove carbon deposit on top of the piston and on the piston ring grooves carefully.

Attention:

- Do not clean the piston with a metal brush, or the piston may be damaged.
- Visually examine if there is any crack, scar or other excessive wear on each cylinder.
  The piston must be replaced if any above mentioned occurs.

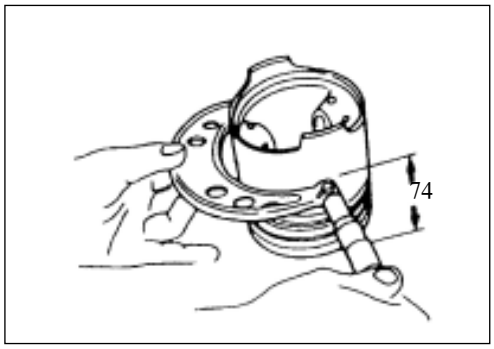

(b) Measure piston outer diameter with spiral micrometer on piston group position. Piston group position: 74mm.

Piston outer diameter mm

Dimension mark	Standard value
A	92.985-92.994
B	92.995-93.004
C	93.005-93.014
D	93.015-93.024

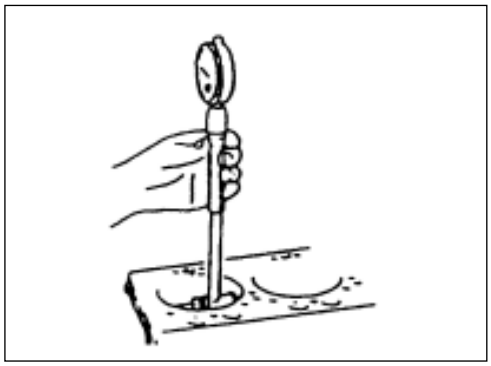

(c) Measure the inner diameter of the cylinder casing hole.

Inner diameter of the cylinder casing hole mm

Dimension mark	Standard value
A	93.021-93.030
B	93.031-93.040
C	93.041-93.050
D	93.051-93.060

Piston clearance: (0.025-0.045)mm

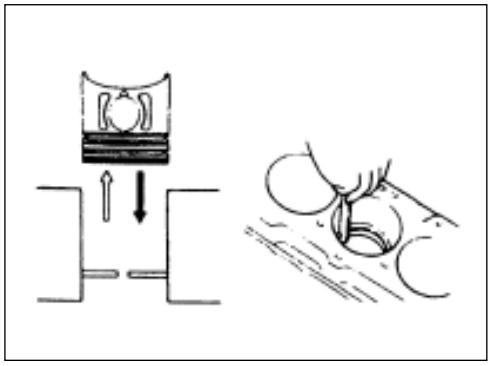

2. Piston ring

(1) Opening clearance of the piston ring
Mount the piston ring into the cylinder casing.
Measure the opening clearance with a feeler gauge.

Opening clearance of the piston ring mm

		Standard value	Limit value
Air ring	First ring	0.20-0.40	0.150
	Second ring	0.20-0.40	
Oil ring		0.10-0.30	

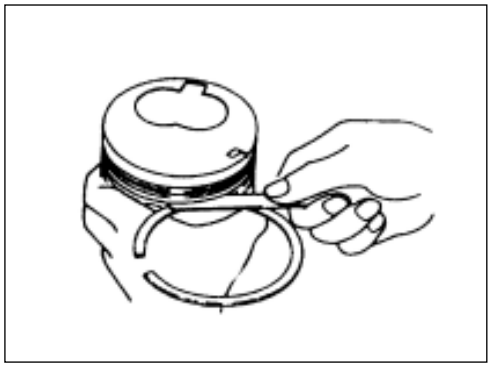

(2) Axial direction gap between the piston ring and piston ring groove
Measure the axial direction gap between the piston ring and piston ring groove with a feeler gauge.
The piston must be replaced if the gap exceeds the prescribed limit value.

Axial direction gap between the piston ring and piston ring groove mm

		Standard value	Limit value
Air ring	First ring	0.090-0.125	0.150
	Second ring	0.050-0.075	
Oil ring		0.03-0.07	

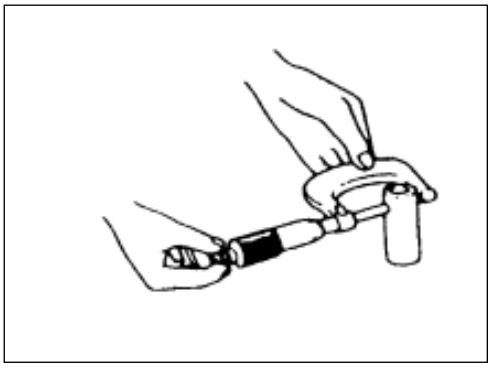

3. Piston pin

Examine the piston pin visually to find if there is any crack, scar or other damage on it, replace the piston pin when necessary.

(a) Measure the outer diameter of the piston pin on three different positions and along two different directions with a spiral micrometer.

The piston pin must be replaced if the measurement value exceeds the prescribed limit value.

Outer diameter of the piston pin mm

Standard	Limit
30.995-31.000	30.970

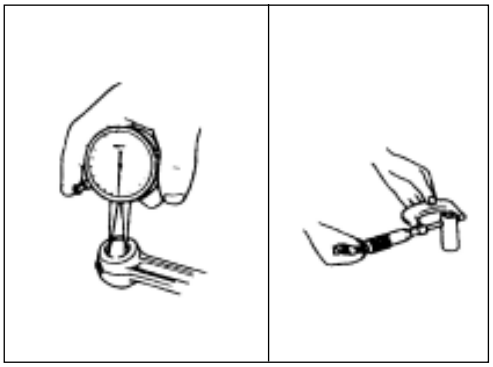

(b) Measure the inner diameter of the small end hole of the connecting rod.

If the gap between the small end hole of the connecting rod and the piston pin do not comply with requirement, the connecting rod or the bush and the piston pin must be replaced.

Gap between the small end hole of the connecting rod and the piston pin mm

Standard	Limit
0.008	0.05

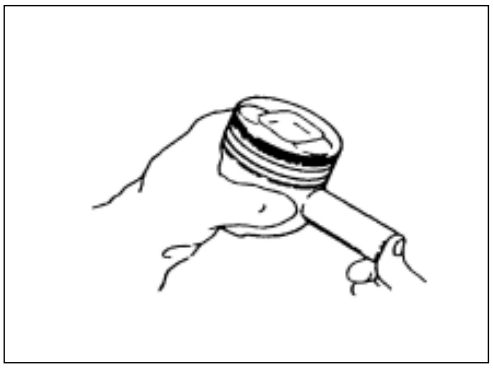

(c) Insert the piston pin into its seat hole and turn it.

If the piston pin turns freely with no gap, then the gap is normal. Measure the gap if there is any gap or roughness.

The piston or piston pin must be replaced if the gap exceeds the prescribed limit value.

Axial direction gap between the piston pin and piston pin seat hole mm

Standard	Limit
0.002-0.004	0.04

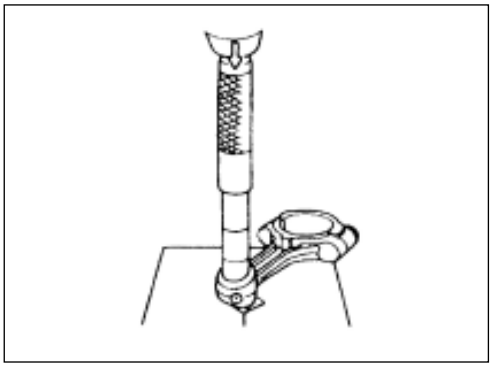

4. Bush

Disassembly: with suitable bar and table press or hammer.

Assembly: with suitable bar and table press.

Attention:

The bush shall align with the oil hole of the connecting rod small end.

Grind the bush hole with pin hole grinding miller after new bush installed.

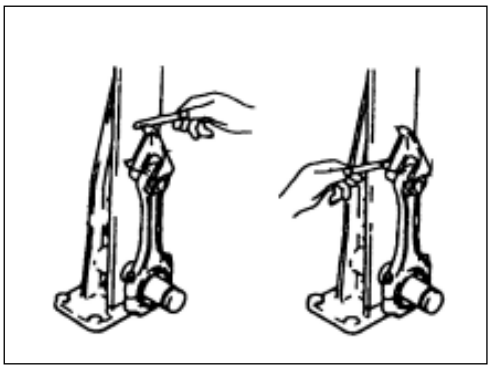

5. Connecting rod

(1) Reducer hole axial line error of the connecting rod.

Examine the reducer hole axial line error of the connecting rod with connecting rod calibrator.

The connecting rod must be replaced if the degree of bending or distortion exceeds the prescribed limit value.

	Standard	Limit
The degree of bending	0.08 or less	0.20
The degree of distortion	0.05 or less	0.15

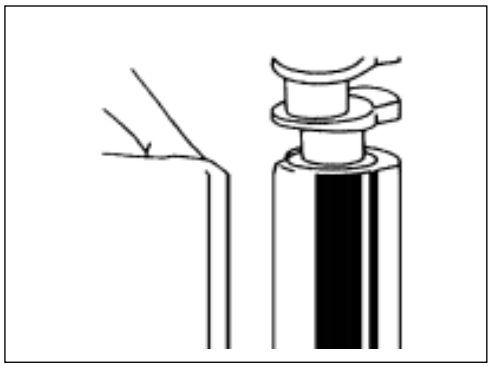

(2) Axial gap of the connecting rod

Measure the thrust clearance of the large end of connecting rod with feeler gauge.

The connecting rod must be replaced if the measurement value exceeds the prescribed limit value.

Axial gap of the connecting rod mm

Standard	Limit
0.230	0.350

(3) Oil clearance between the connecting rod bearing and the crank pin

(a) Dismount nuts of the connecting rod bearing cover; remove the connecting rod bearing cover.

Place the connecting rod bearing cover according to the cylinder serial number.

(b) Clean the surface of connecting rod bearing and crank pin.

(c) Examine carefully if there is any damage of the connecting rod bearing.

All of the bearings shall be replaced as a whole even if only a bearing is found damaged or severe wear.

(d) Reassemble the connecting rod bearings to their original positions.

(e) Place a plastic line gap gauge onto the crank pin.

(f) Reassemble the connecting rod bearing cover to their original position.

(g) Screw down the connecting rod cover nuts to prescribed torque by angle-screw home method in two steps

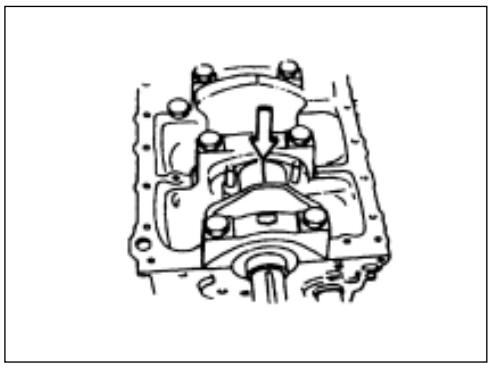

Torque of the connecting rod cover nuts N · m

Standard	Limit
45	60-90°

Attention:

Crankshaft rotation is not permitted when screwing down the connecting rod cover nuts.

(h) Dismount the connecting rod bearing cover.

(i) Measure the width of the plastic line gap gauge and determine oil film gap.

The connecting rod bearings must be replaced as a whole if the gap exceeds the prescribed limit value.

(j) Erase the plastic line gap gauge from the crank pin.

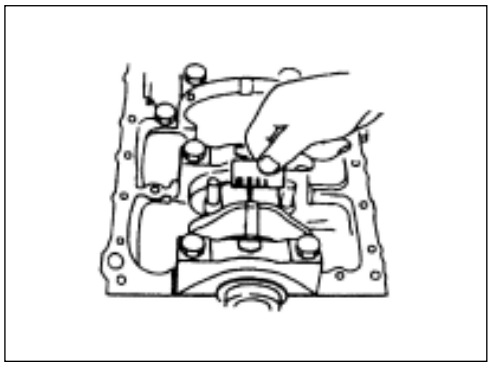

Oil clearance between the connecting rod bearing and the crank pin mm

Standard	Limit
0.029-0.066	0.100

Reassembly

1. Connecting rod
2. Piston

(a) Mount the piston onto the connecting rod. Front mark on top of the piston shall be at the same side with the casting mark "ISUZU" on the connecting rod.

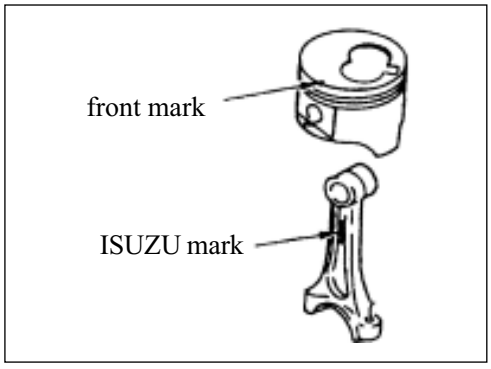

Attention:

Do not change the mating assembly of the piston and its pin when replacing the piston and the connecting rod mating assembly.

3. Piston pin
   (a) Smear the piston pin and its seat hole with machine oil. Push the piston pin into the hole of piston pin seat hole.
   (b) Weight the assembly of each piston and connecting rod. Weight difference of difference cylinder and same assembly shall be limited to prescribed range when selecting the assembly of piston and connecting rod.
   Prescribed value: Less than 3g.
4. Retaining ring of the piston pin

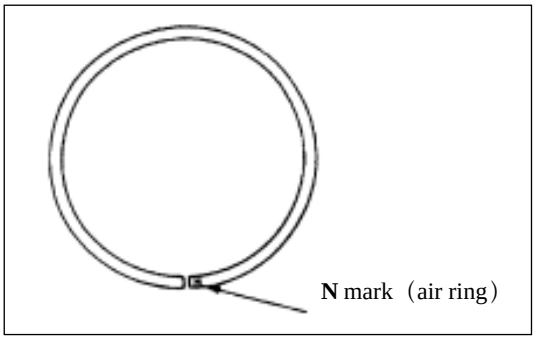

5. Piston ring
   (a) Mount the piston ring with a piston ring extender.
   The mark "N" shall be toward upside when mounting the caustic ring.
   The position of the identification mark is shown in the diagram.

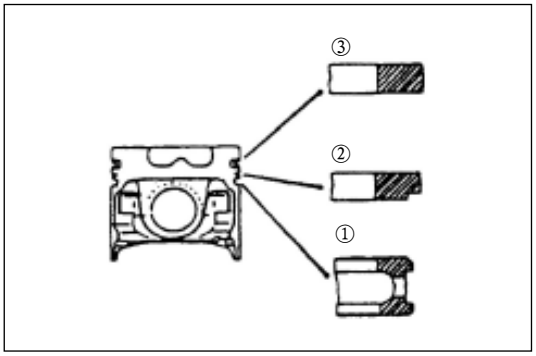

   (b) The piston ring shall be assembled as following procedures.
   ① Oil ring
   Oil ring with spiral expansion ring.
   ② The second air ring
   ③ The first air ring
   (c) Smear the surfaces of all the piston rings with machine oil after assembly has been completed, examine if the piston ring rotates freely.

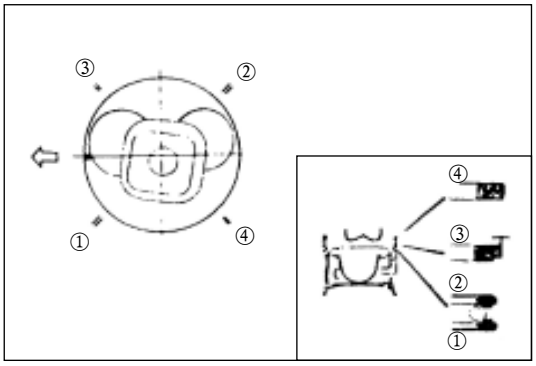

6. Piston and connecting rod assembly
   (a) Smear the surfaces of the cylinder casing hole, connecting rod bearing, crank pin, piston ring and piston
   Examine if the opening position of piston ring is correct.

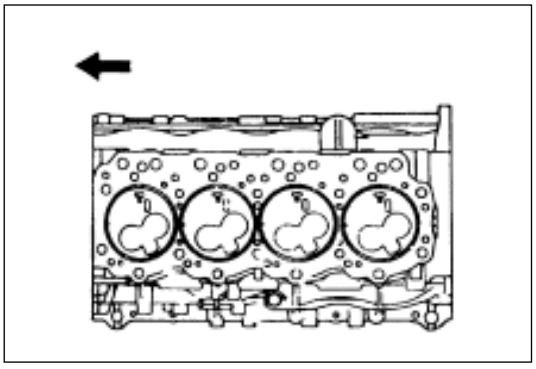

   (b) Mount the piston and connecting rod assembly into each cylinder with a piston ring compressor.
   The front mark on top of the cylinder must be forward.

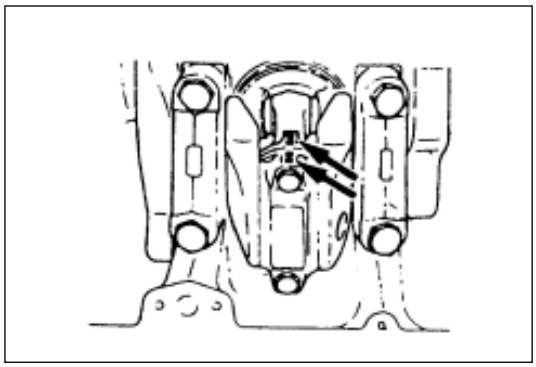

7. The connecting rod bearing cover.
   (a) Align the stamped marks of the connecting rod and the connecting rod bearing cover.
   (b) Smear machine oil on the bolt threads and mating surface of the connecting rod bearing cover.
   (c) Screw down the connecting rod cover nuts to prescribed torque by angle-screw home method in two steps.

   Torque of the connecting rod cover nuts N • m

First step(pre-tighten torque)	Second step(final torque)
45	60-90°

   (d) Examine if the crankshaft rotates freely after screwing down the connecting rod cover nuts.

8. Engine oil pump assembly
   (See page EN-17)
9. Oil bottom casing assembly
   (See page EN-17)
10. Cylinder cover assembly
   (See page EN-17)

Engine oil pump assembly

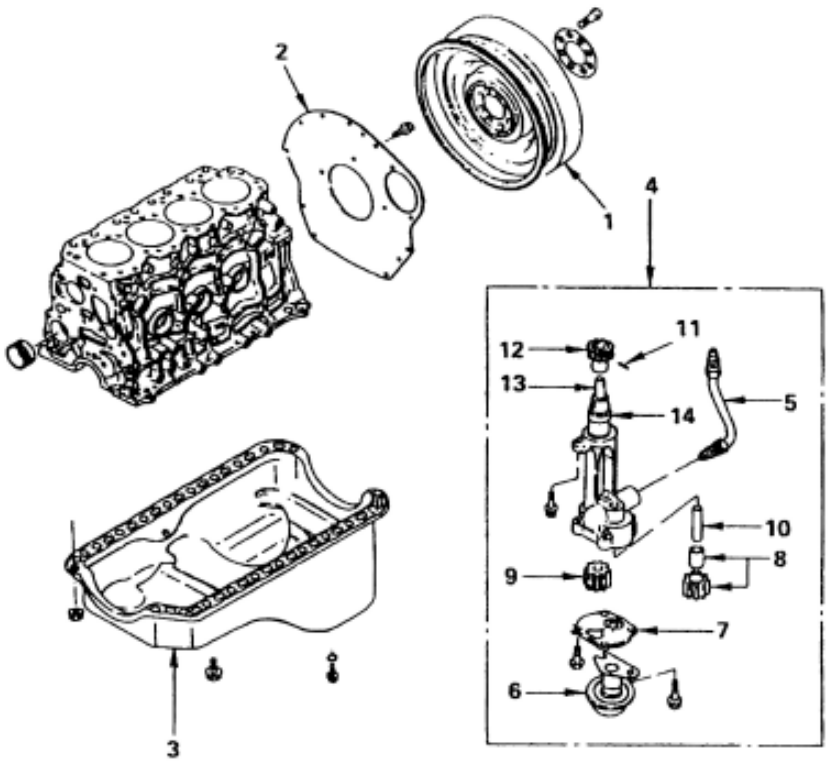

Disassembly procedure

1. flywheel
2. back plate of the machine body
3. oil bottom casing assembly
4. engine oil pump assembly
5. oil pipe
6. strainer
7. pump cover
8. driven gear and bush
9. driving gear
10. driven shaft
11. pinion pin
12. pinion
13. driving shaft
14. engine oil pump body

Reassembly procedure

Reassemble according to the reverse procedure of disassembly.

Disassembly

1. Flywheel
2. Back plate of the machine body
3. Oil bottom casing assembly
4. Engine oil pump assembly
5. Oil pipe
6. Strainer
7. Pump cover
8. Driven gear and bush
9. Driving gear
10. Driven shaft
11. Pinion pin
    (a) File the riveting end of the pinion retention pin to flat.
    (b) Knock the pinion pin out with a hammer and rod.
    (c) Dismount the pinion.
12. Pinion
13. Driving shaft
14. Machine oil pump body

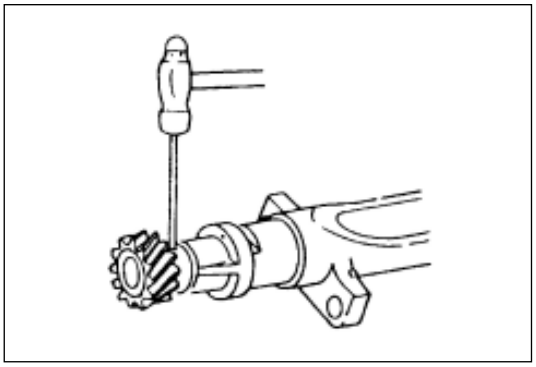

Inspection and maintenance

Parts must be adjusted, repaired or replaced when excess wear or damage is found in examination.

Casing and gears

The machine oil pump assembly must be replaced if following conditions are found in examination.

(a) Excess wear or damage of driven gear shaft bush.

(b) Excess wear or damage of gear teeth.

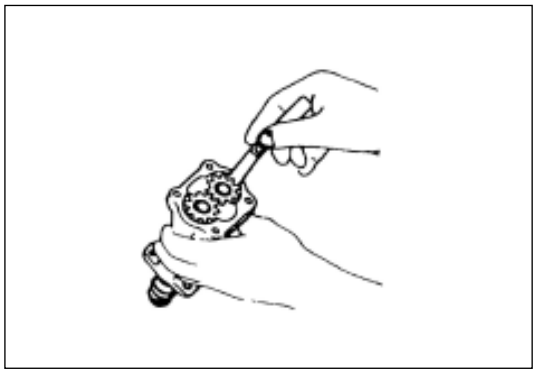

Gap between gear top tooth and the casing inner surface

(a) Measure the gap between gear top tooth and the casing inner surface with a feeler gauge.

(b) Either the gear or the casing must be replaced if the gap between gear top tooth and the casing inner surface exceeds limitation.

Gap between gear top tooth and the casing inner surface mm

Standard	Limit
0.14	0.20

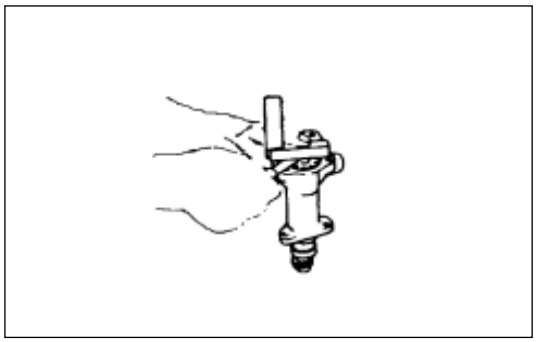

Gap between the pump cover and the gear

(a) Measure the gap between the pump cover and the gear with a feeler gauge.

(b) The casing must be replaced if the gap between the pump cover and the gear exceeds the prescribed limit value.

Gap between the pump cover and the gear mm

Standard	Limit
0.06	0.15

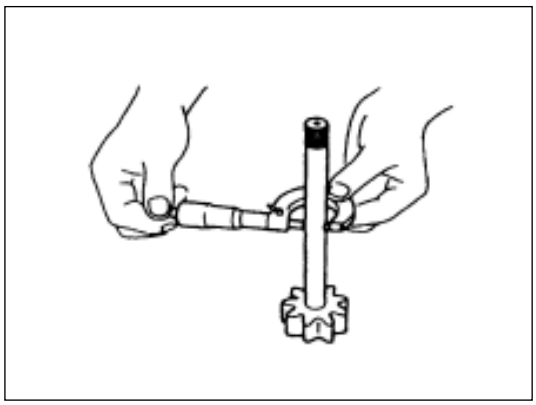

Gap between the driving shaft and the machine oil pump body

(a) Measure the outer diameter of driving shaft with a spiral micrometer.

(b) Measure the inner diameter of the pump body with an inner diameter micrometer.

(c) The machine oil pump assembly must be replaced if the gap between the driving shaft and the machine oil pump exceeds the prescribed limit value.

Gap between the driving shaft and the machine oil pump body mm

Standard	Limit
0.04	0.20

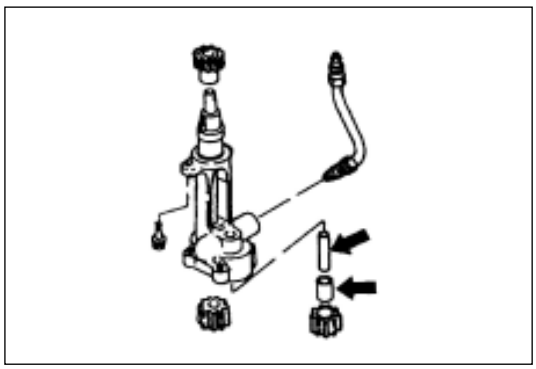

Gap between the driven shaft and the bush

(a) Measure the outer diameter of driven shaft with a spiral micrometer.

(b) Measure the inner diameter of the bush with an inner diameter micrometer.

(c) The bush must be replaced if the gap between the driven shaft and the bush exceeds the prescribed limit value.

Gap between the driven shaft and the bush mm

Standard	Limit
0.05	0.15

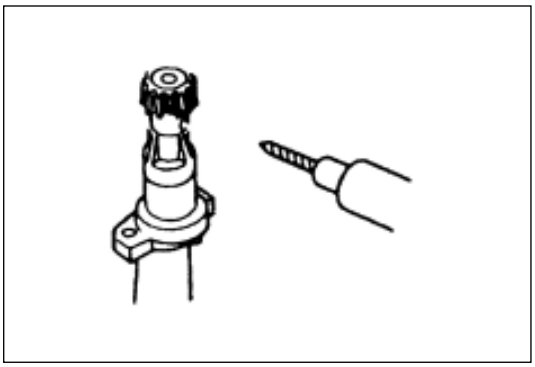

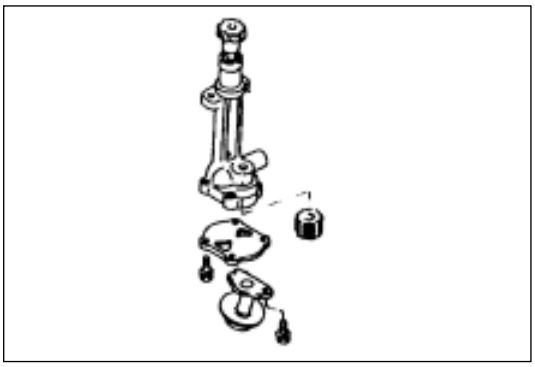

Reassembly

1. Engine oil pump body
2. Main shaft
3. Pinion
4. Pinion pin
   (a) Mount the new transmission shaft onto the machine oil pump body.
   (b) Mount the pinion onto the driving shaft.
   (c) Drill a hole of 5mm diameter to let the pinion and transmission shaft through.
   (d) Insert the pinion pin into the hole.Rivet the small pin
5. Driven shaft
6. Driving gear
7. Driven gear and bush
8. Pump cover
9. Strainer assembly
   Mount the strainer assembly and screw down its fastening bolts to prescribed torque.
   Tighten torque: 16N 谍.
10. Oil pipe

11. Engine oil pump assembly
    (See page EN-17)
12. Oil bottom casing assembly
    (See page EN-17)
13. Back plate of the machine body
    (See page EN-17)
14. Flywheel
    (See page EN-17)

Engine body

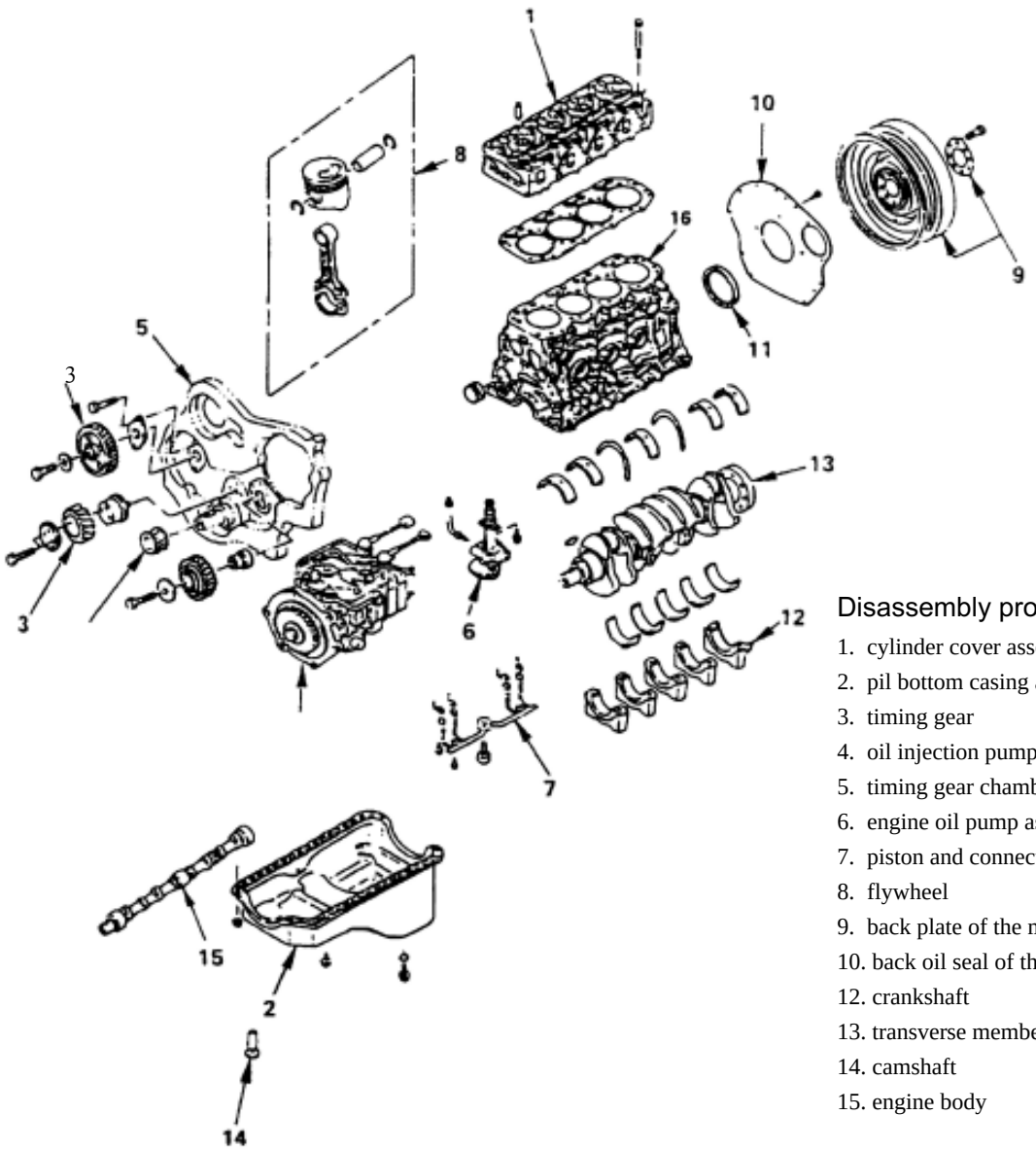

Disassembly procedure

1. cylinder cover assembly
2. pil bottom casing assembly
3. timing gear
4. oil injection pump assembly
5. timing gear chamber
6. engine oil pump assembly
7. piston and connecting rod assembly
8. flywheel
9. back plate of the machine body
10. back oil seal of the crankshaft
12. crankshaft
13. transverse member
14. camshaft
15. engine body

Reassembly procedure

Reassemble according to the reverse procedure of disassembly.

Disassembly

1. Cylinder cover assembly
2. Oil bottom casing assembly
3. Timing gear
4. Injection pump assembly
5. Timing gear chamber
6. Engine oil pump assembly
7. Piston and connecting rod assembly
8. Flywheel
9. Back plate of the machine body
10. Back oil seal of the crankshaft

11. Main bearing cover.
12. Crankshaft
13. Transverse member
14. Camshaft
15. Engine body

Inspection and maintenance

Parts must be adjusted, repaired or replaced when excess wear or damage is found in examination.

(a) Remove the gasket and any attachment on the surfaces of the machine body.

Notes:

Take care not let any matter drop into the machine body.

Take care not to score the machine body surface.

(b) Remove the gasket on the contact surface of the oil pump assembly ,rear oil seal retaining ring and oil bottom casing.

(c) Clean the surface of machine body.

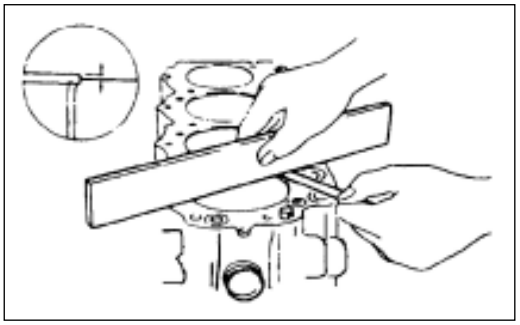

Cylinder bush projection quantity examination

(a) Put the straight ruler at the top edge of cylinder bush to be measured.

(b) Measure projection quantity of each cylinder bush. Cylinder bush projection quantities difference between two adjacent cylinders shall not exceed 0.03mm.
Standard value: (0.0-0.1)mm.

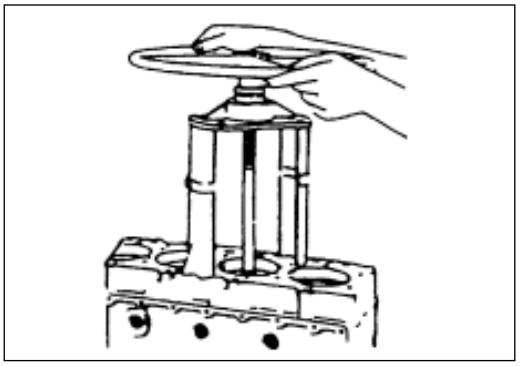

Flatness

(a) Dismount the fixing pin of machine body.

(b) Mount the cylinder bush detacher onto the cylinder bush.

(c) Examine if the base frame on the detacher shaft moves around the edge of the cylinder bush bottom.

(d) Turn the handwheel of detacher shaft anti-clockwise slowly to pull the cylinder bush out.
Cylinder bush detacher: 5-8840-2039-0

Attention:

Take care not to damage the surface of the cylinder when dismounting the cylinder bush.

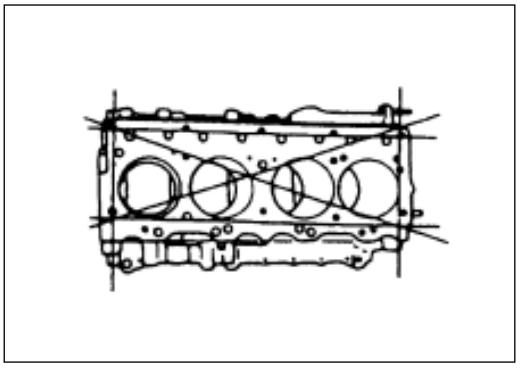

(e) Measure four edges and two diagonal lines of the machine body surface with straight ruler and feeler gauge.The machine body must be replaced if the measurement value exceeds the prescribed limit value.

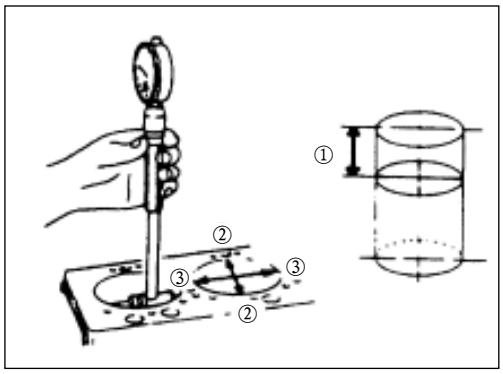

Measurement of the Inner diameter of cylinder casing hole

Measure the cylinder bush hole diameter of measurement point ① along thrust direction ②-② and crankshaft axial direction ③-③.

Height of measurement point ①:20mm

The cylinder bush must be replaced if the measurement value exceeds the prescribed limit value.

Attention:

Do not regrind or grind inner surface of dry cylinder bush because it is chroming.

The cylinder bush must be replaced if there is any scratch or burn in the cylinder bush inner surface.

Selection of cylinder bushes group

Measure the inner diameter of cylinder hole, select suitable cylinder bushes group.

Standard fitting interference: (0.001-0.019)mm

Cooling efficiency for the engine will be affected if fitting interference of the cylinder bush is too small.

Difficulty will arises when mounting the cylinder bush into the cylinder hole if fitting interference of the cylinder bush is too large.

Attention:

There are two methods for cylinder bush selection.

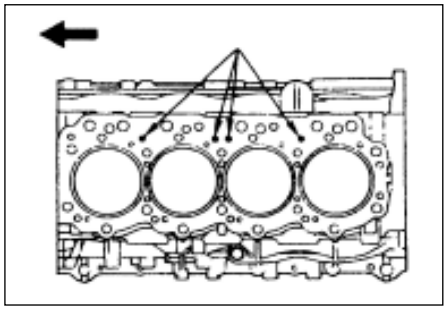

Method I

Mark have been stamped on the engine body surface in manufacturing to indicate correct cylinder bush size.

Cylinder bushes groups (1, 2, 3, 4 and etc.) are printed with permanence ink.

Select proper cylinder bush according to the following method if there is any question of the cylinder bush marks.

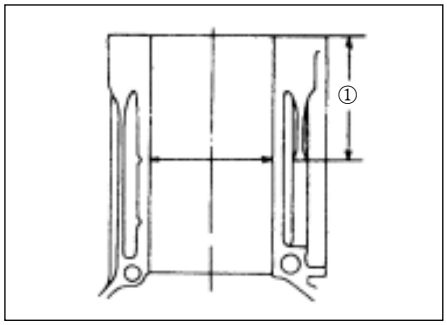

Method II

Measurement of the engine body inner hole

(a) Measure the inner diameters of section I-I, II-II, III-III and IV-IV at measuring point ①.

Height of measurement point ①:98mm

(b) Calculate mean value of four measured dimensions to determine suitable cylinder bushes group.

(c) Refer to the following table on the basis of the mean value, select suitable cylinder bushes group.

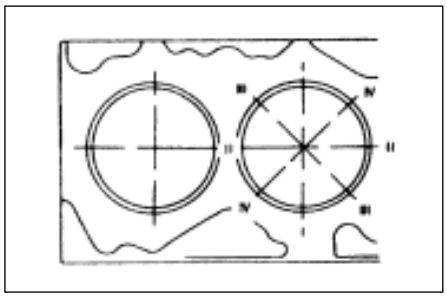

4D28 mm

Classified cylinder bush	Average diameter of inner hole of engine body	Outside diam eter of cylinder bush
1	95.001-95.010	95.011-95.020
2	95.011-95.020	95.021-95.030
3	95.021-95.030	95.031-95.040
4	95.031-95.040	95.041-95.050

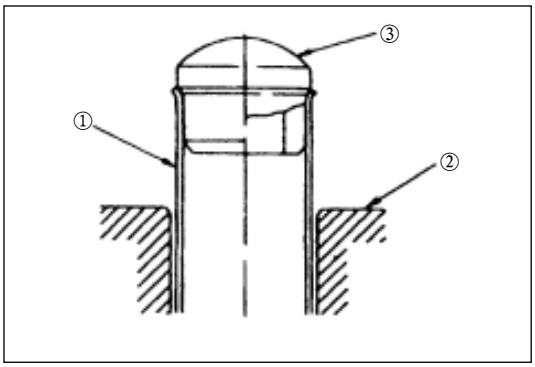

Installation of the cylinder bush

(a) Clean thoroughly surfaces of the cylinder bush and cylinder hole with fresh kerosene or diesel oil.

(b) Blow surfaces of the cylinder bush and cylinder hole to dry with compressed air.

(c) Mount the cylinder bush with special tool.
Cylinder bush erector: 5-8840-2040-0

Attention:
Removal all foreign bodies from the cylinder bush and cylinder hole carefully before mounting the cylinder bush.

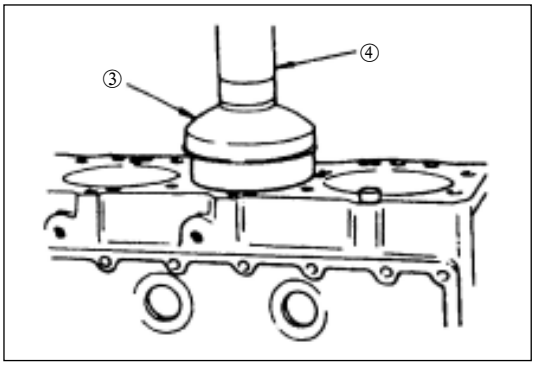

(d) Press the cylinder bush ① into the cylinder hole ② from top of the engine body.

(e) Mount the cylinder bush erector ③ on top of the cylinder bush.

(f) The engine body position shall ensure the erector centre line directly under the table press axle centre ④.

Attention:
Examine to ensure that the engine body is perpendicular to the table press and there is no shake.

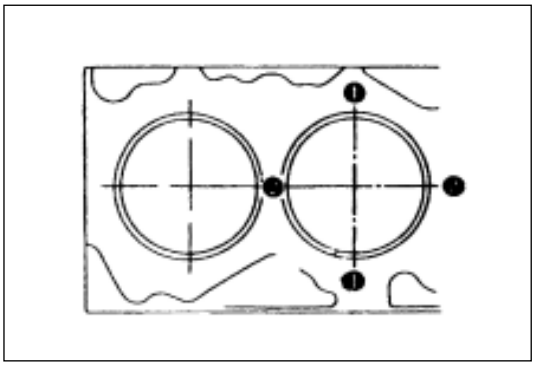

(g) Exert allocation force of 4,900N on the cylinder bush with a table press.

(h) Exert force of 24,500N to make the cylinder bush fully in position.

(i) After the cylinder bush being mounted, measure its projection quantity.
Refer to "Cylinder bush projection quantity examination" in this chapter.

(j) Measure the diameter of cylinder bush, select suitable cylinder bushes group.

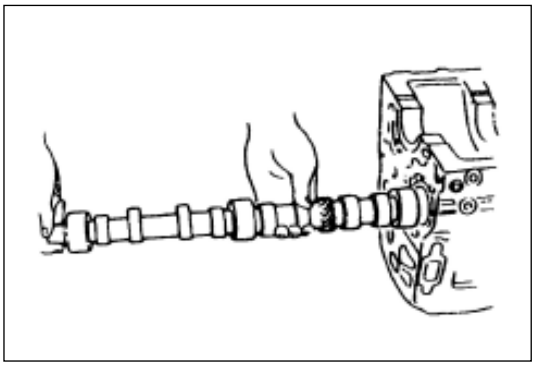

Reassembly

1. Engine body
2. Camshaft
   (a) Apply machine oil into the transverse member surface and its mounting hole.
   (b) Mount the transverse member according to the position in disassembly (if the transverse member will be reused).
   (c) Smear the camshaft and its bearings with machine oil.
   (d) Mount the camshaft onto the engine body.
   Take care not to damage the camshaft bearings.
3. Transverse member
4. Crankshaft (See page EN-22)
5. Main bearing cover. (See page EN-22)
6. Back oil seal of the crankshaft (See page EN-23)
7. Back plate of the machine body
8. Flywheel (See page EN-17)

9. Piston and connecting rod assembly

(a) Smear the piston pin and its seat hole with machine oil. Push the piston pin into the hole of piston pin seat hole.

(b) Weight the assembly of each piston and connecting rod. Weight difference of difference cylinder and same assembly shall be limited to prescribed range when selecting the assembly of piston and connecting rod.
Prescribed value: Less than 3g.

(c) Clamp the connecting rod with a jaw.
Take care not to damage the connecting rod.

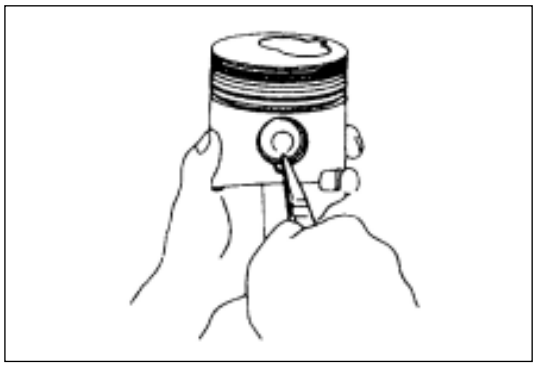

(d) Mount the piston pin retaining ring into its groove with nipper pliers.

Attention:
Do not change the mating assembly of the piston and its pin when replacing the piston and the connecting rod mating assembly.

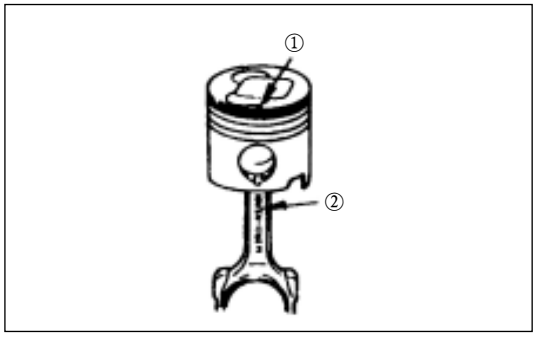

(e) Mount the cylinder onto the connecting rod.
Front mark ① on top of the piston and the casting mark "ISUZU" ② on the connecting rod shall face the same direction.

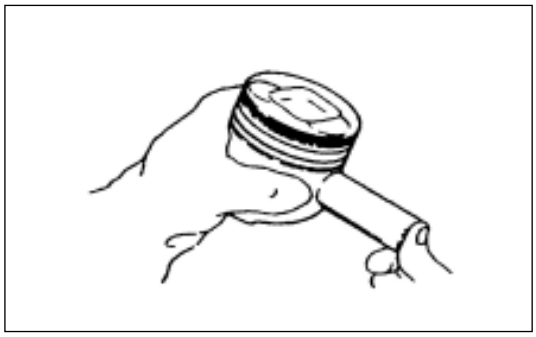

(f) Smear the piston pin and its seat hole with machine oil
Press the piston pin into the piston with fingers until it contacts with the piston pin retaining ring.

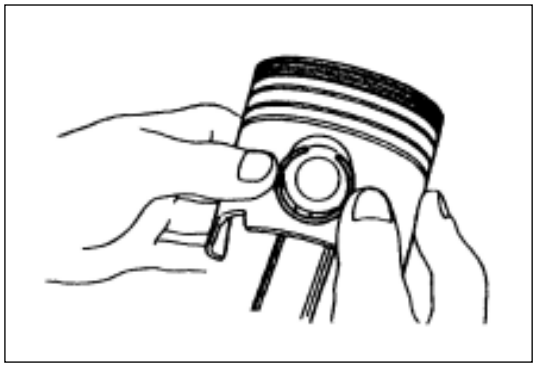

(g) Mount the piston pin retaining ring into its groove with fingers.
Examine if the connecting rotates freely on the piston pin.

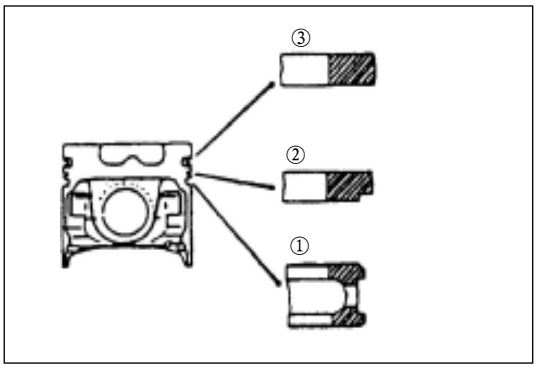

(h) Coat the piston ring surface with engine oil.
Mount three piston rings with a piston ring replacer.
Piston ring replacer: 5-8840-9018-0
The piston ring shall be assembled as following procedures.
① Oil ring
② The second air ring
③ The first air ring

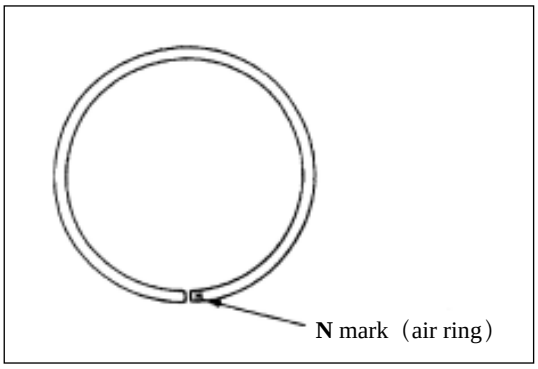

Attention:

- The marked face shall be toward upside when mounting the caustic ring.The identification mark is shown in the diagram.
- Mount the spiral expansion ring into the grooves of oil ring, ensure there is no clearance around any side of the expansion ring before mounting the oil ring.

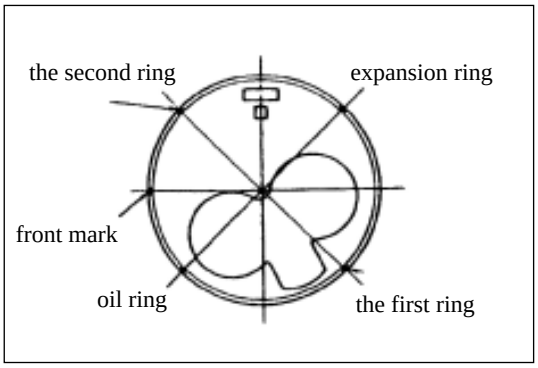

(i) Place the opening position of piston ring properly as shown in the diagram.
Examine if the piston ring rotates freely on the piston ring groove.

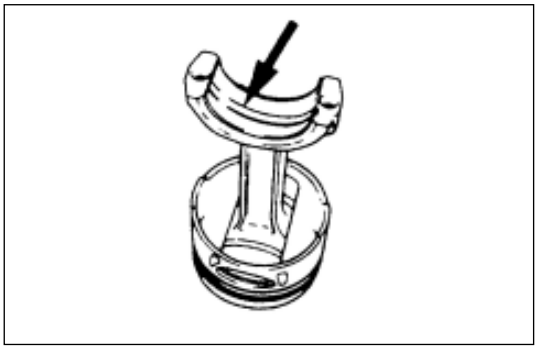

(j) Removal the oil stain and foreign bodies on the connecting rod bearing surface.
(k) Coat the top/bottom bearings of the connecting rod with engine oil, mount them into the connecting rod bearing seats.

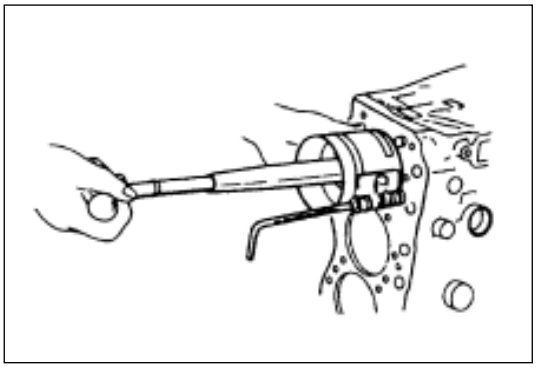

(l) Coat the cylinder wall with engine oil.
Place the piston in position, the front mark on top of the piston must face the direction of engine.
Compress the piston ring with a piston ring compressor.
Piston ring compressor: 5-8840-9018-0（J-8037）
(m) Push the piston into the cylinder with hammer shaft until the top bearing of connecting rod contacts with the crank pin.
Turn the crank pin at the same time until it locates at the bottom dead point.

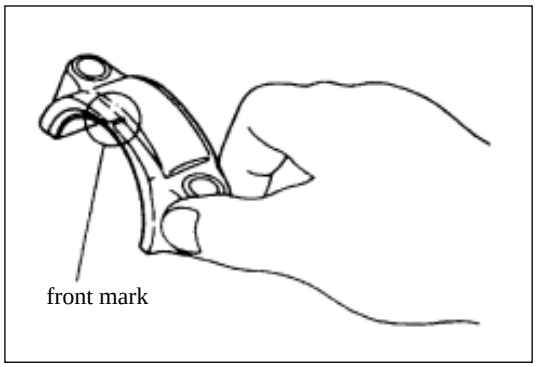

(n) Place the connecting rod bearing cover in position. The front mark on top of the piston must face the direction of engine.
Align the cylinder serial number on the connecting rod bearing cover with that on the connecting rod.

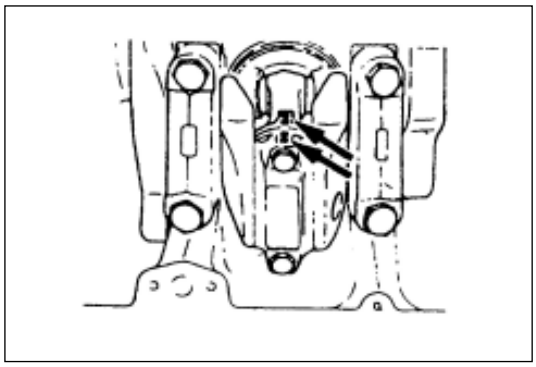

(o) Smear machine oil on the bolt threads and mating surface of each connecting rod bearing cover.

(p) Screw down the connecting rod bearing cover nuts to prescribed torque by angle-screw home method in two steps.

Torque of the connecting rod cover nuts N • m

First step(pre-tighten torque)	Second step(final torque)
45	60 - 90

Attention:
Turn the crankshaft by hand to examine if the crankshaft rotates freely.

10. Engine oil pump assembly
    (see page EN-17)
11. Timing gear chamber
12. Injection pump assembly
13. Timing gear
    (see page EN-25)
14. Oil bottom casing assembly
15. Cylinder cover assembly
    (see page EN-17)

4D28 Engines

Page

General description

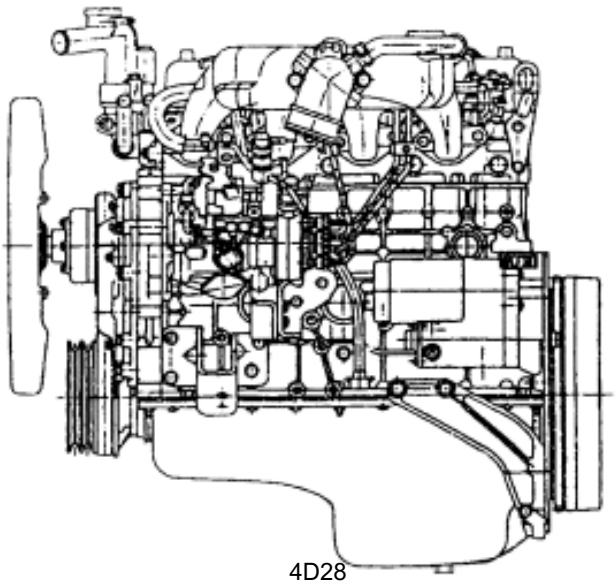

4D28

The GW4D28 diesel engine employs ω shaped combustion chamber. This kind of design results in good fuel economy in a broad stroke.

The cylinder cover sealing washer is piled with thin sheet steels.

The cylinder cover sealing washer can be divided into three dimensions according to the bulging that the top of the piston protrudes the block, and then this can reduce the deviation range of the compression ratio

Tight the cylinder cover fixing bolts, connecting rod fixing bolts and flywheel fixing bolts with the angle-tight method

The steel chome plated dry liner has higher durability

The automatic thermal compensation piston is sustained by cast steel to abate noises caused by heat expansion and cooling down

The soft nitriding crankshaft has a long life.The crankshaft canít be reground because of the Tenifer process

The crankshaft main bearing and rod bearing are both made of aluminum alloy. This kind of bearing is vulnerable to being damaged by impurities (such as flitter).So it is very important to keep oil orifice and other related surfaces clean and to discharge impurities.

The Tenifer process (nitrogen treatment) of the crankshaft increases its strength and dispense with regrinding crankpin and maneton and such work.

The oil injection equipment cooling the piston is set in the oil circuit to inject oil to the piston from the oil passage of the housing through the check valve.

Take care not to damage the oil nozzle when disassembling and assembling piston and rod assembly.

The GW4D28 diesel engine is a direct injection diesel engine. The injector has four orifices and then this may obtain the optimal mixture ratio of the admission and fuel injection.

The QOSII preheating system is used in the GW4D28 diesel engine. Its characteristic is that the system can switch on quickly to preheat and can control the time when the preheatinig starts and ends with a thermometer

Engine assembly

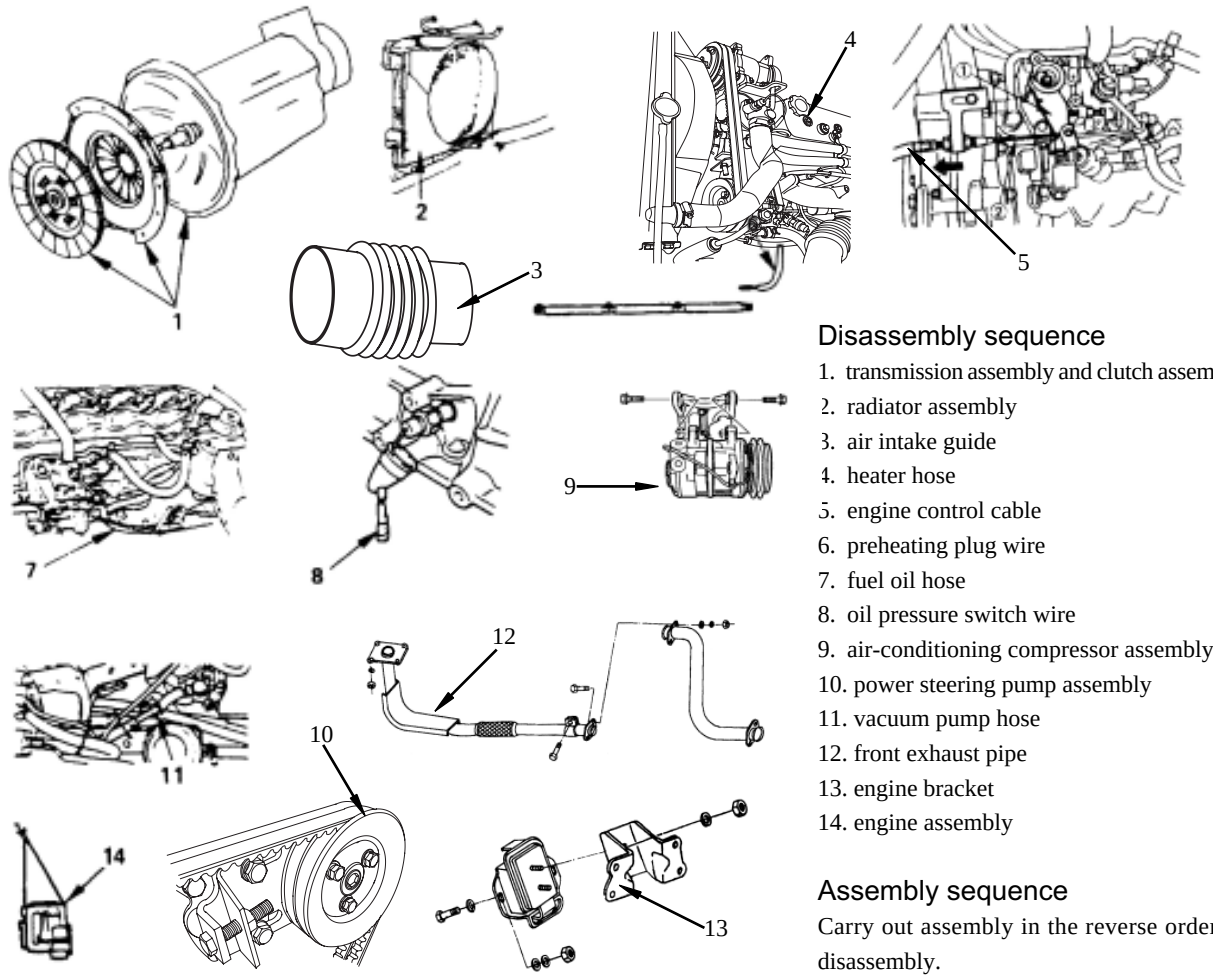

Disassembly sequence

1. transmission assembly and clutch assembly
2. radiator assembly
3. air intake guide
4. heater hose
5. engine control cable
6. preheating plug wire
7. fuel oil hose
8. oil pressure switch wire
9. air-conditioning compressor assembly
10. power steering pump assembly
11. vacuum pump hose
12. front exhaust pipe
13. engine bracket
14. engine assembly

Assembly sequence

Carry out assembly in the reverse order of disassembly.

Disassembly

Preparation work

- Break the grounding cable of the storage battery
- Drain off coolant

1. Transmission assembly and clutch assembly

Raise the car and sustain it with a proper secure bench

(1) Transmission assembly

(a) Demount the propeller-shaft on the flange yoke

(b) Disassemble the transmission assembly

(2) Clutch assembly

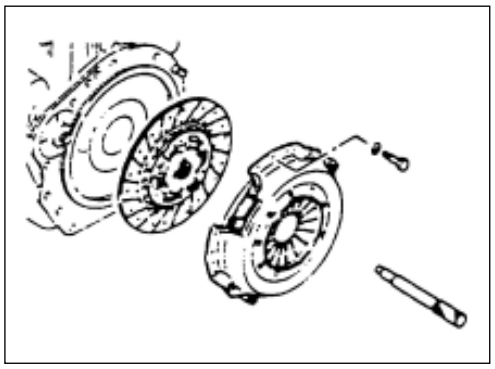

Note: Donít leave the clutch liquid on the surface of the paint, flush it away immediately

(1) platen assembly

(2) clutch plate assembly

(a) Use guiding plummet to avoid clutch plate assembly falling freely

Guiding plummet:5-5825-3001-0

(b) Mark on the flywheel and the platen flange for alignment when mounting

(c) Release platen assembly fixing bolts, detach clutch assembly

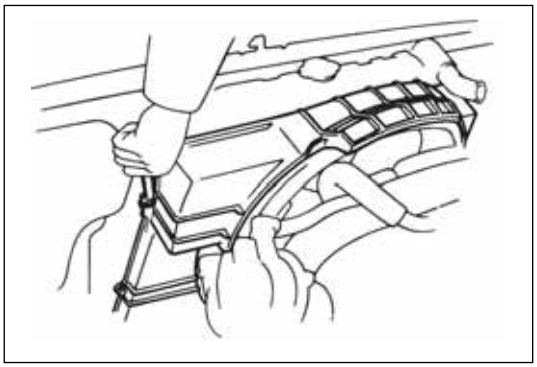

2. Radiator assembly
   (a) Demount the upper and lower hoses of the radiator
   (b) Disassemble overflow tank hose
   (c) Disassemble the radiator assembly

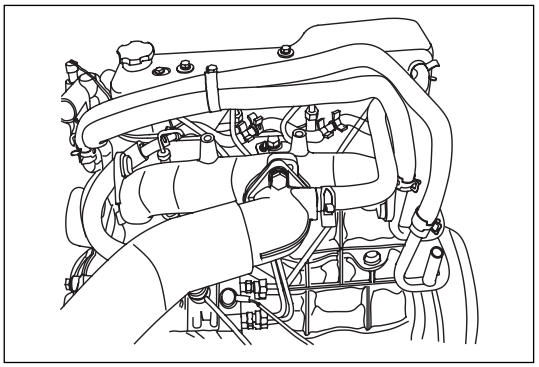

3. Air intake guide
4. Heater hose
5. Engine control cable
   Release the cable bracket fixing bolts and demount the valve control cable from the control lever of the injection pump
6. Preheating plug wire
7. Fuel hose
   Disassemble the fuel inlet hose and oil return hose
8. Oil pressure switch wire

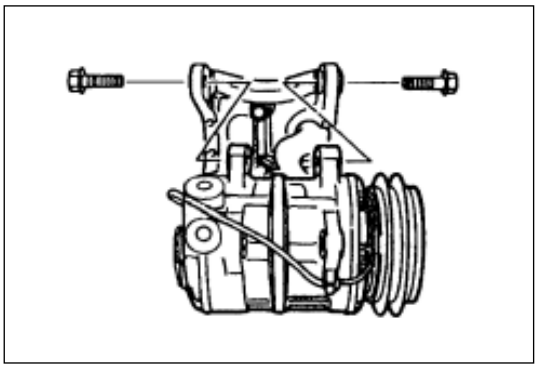

9. Air-conditioning compressor assembly
   (a) Release the air-conditioning compressor adjusting bolts and then disassemble the driving belts
   (b) Disassemble the magnetic clutch wire connector
   (c) Unscrew the air-conditioning compressor fixing bolts, remove the air-conditioning compressor assembly

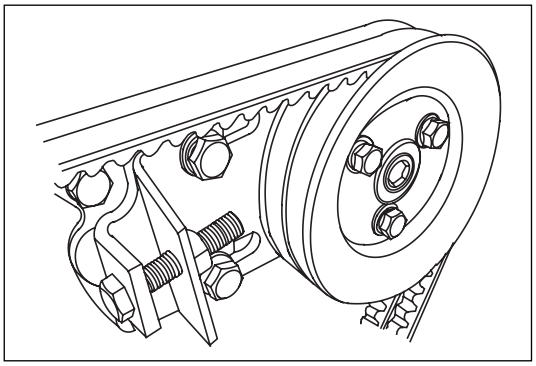

10. Power steering pump assembly
    (a) Unscrew the power steering pump adjusting bolts and then disassemble the driving belts
    (b) Disassemble the inlet hose and oil return hose of the power steering pump
    (c) Unscrew the fixing bolts of the power steering remove the power steering pump assembly
11. Vacuum pump hose

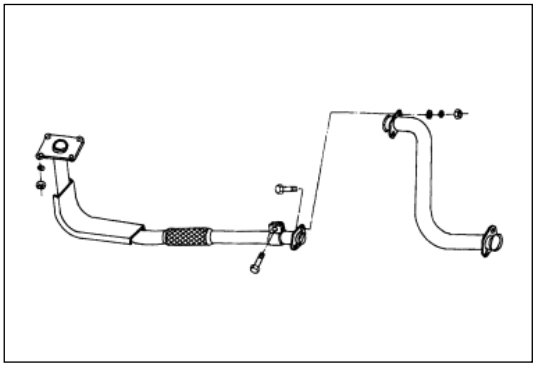

12. Front exhaust pipe
    (a) Demout the fixing bolts of the front exhaust pipes from the exhaust manifold
    (b) Demout the stay bolts of the front exhaust pipes
    (c) Demout the fixing nuts of the front exhaust pipes

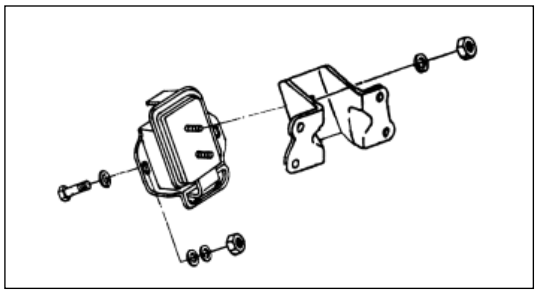

13. Engine bracket

Disassemble the engine bracket and engine jaw pads from both sides of the housing.

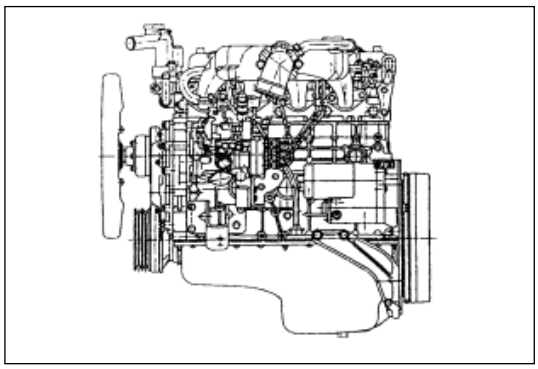

14. Engine assembly

(a) Lift the engine with a crane carefully

(b) The front should be higher than the rear after lifting the engine

(c) Take care not to crash any oil pipe, break pipe and so on when taking out the engine assembly

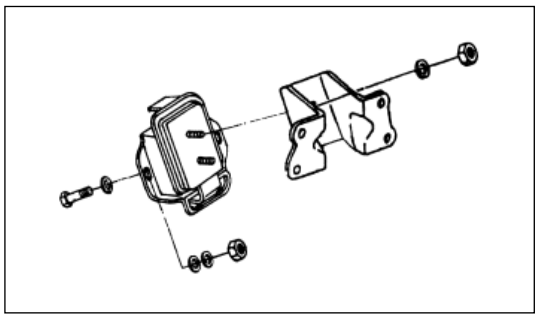

Assembly

1. Engine assembly

Place the engine with the crane

2. Engine bracket

Install the engine bracket, and screw the bracket fixing bolts to the specified torque

Screw down torque: 40N • m

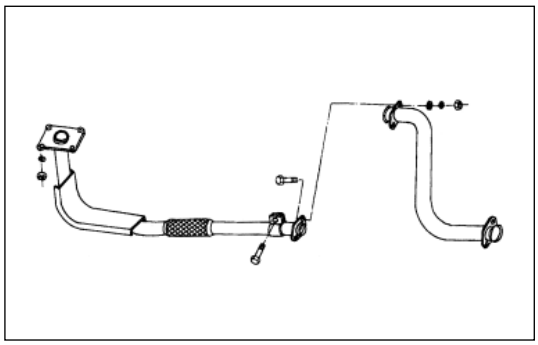

3. Front exhaust pipe

(a) Connect the front exhaust pipes and screw the fixing nuts of the front exhaust pipes to the specified torque

67N • m screw down torque :67N • m

(b) Screw the front exhaust pipe bracket bolts to the specified torque

40N • m screw down torque :40N • m

4. Vacuum pump hose

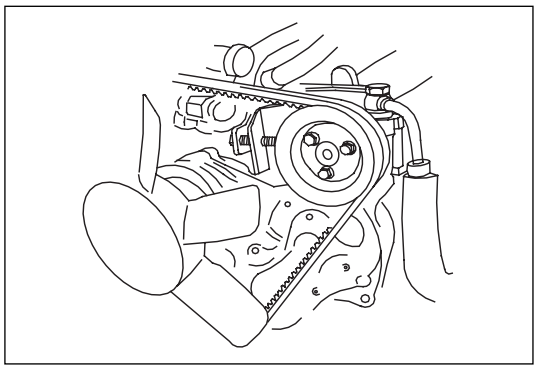

5. Power steering pump assembly

(a) Mount the power steering pump and hose bracket

19N • m the screw down torque to screw the fixing bolts of

the power steering pump:19 N • m

(b) Mount driving belts of the power steering pump and adjust the belt tightening . Check the wear or damage of the belts, change them if necessary

(c) Press the middle of the driving belts with 98N force; check the flexibility of each belt

(8-12)mm standard value of the flexibility :(8-12) mm

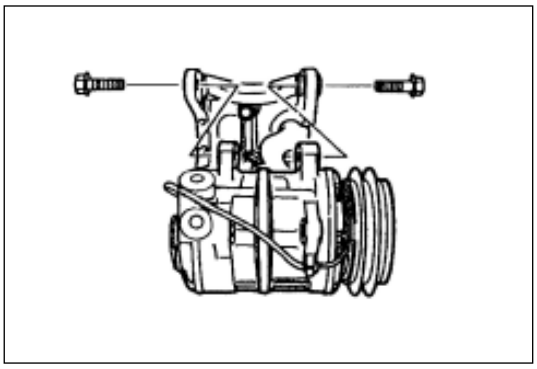

6. Air-conditioning compressor assembly
   (a) Mount the air-conditioning compressor and screw the fixing bolts to the specified torque
   screw down torque :19N 谍
   (b) Connect the wire connector of the magnetic clutch
   (c) Mount driving belts of the air-conditioning compressor and adjust the belt tightening
   Check the wear or damage of the belts, change them if necessary
   (d) Press the middle of the driving belts with 98N force; check the flexibility of each belt
   standard value of the flexibility :(8-12) mm

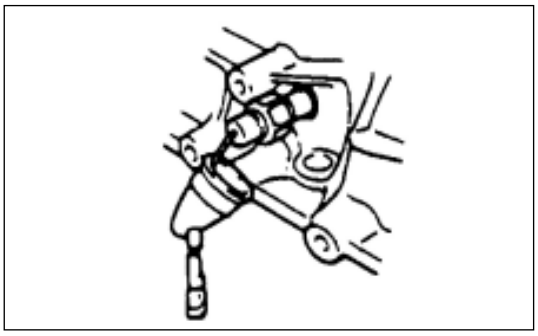

7. Oil pressure switch wire
   Connect the wire connector of the oil pressure switch
8. Fuel hose
   Connect the fuel inlet hose and oil return hose, and then screw the turnbuckle firmly
9. Preheating plug wire
   Connect the wire connector of the preheating plug

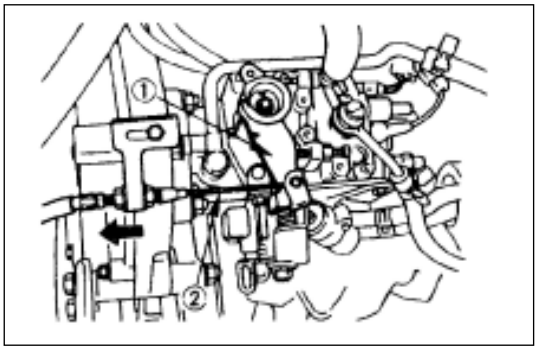

10. Engine control cable
    (a) Install the valve control cable to the control lever of the injection pump
    (b) Switch the valve lever to full close position and strain the control cable in the direction the arrow shows, eliminate any relaxation
    (c) Screw the fixing bolts of the valve cable bracket

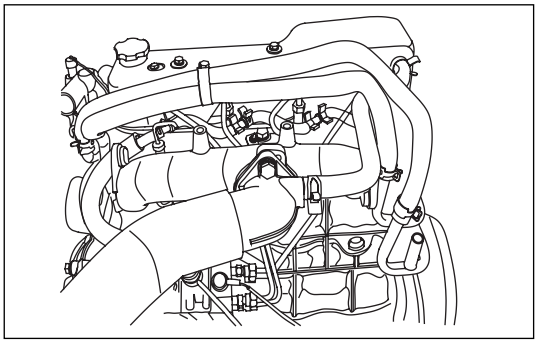

11. Heater hose
    Connect the heater hose and then screw the turnbuckle firmly

12. Air intake guide
    Connect the air intake guide and then screw the turnbuckle firmly.

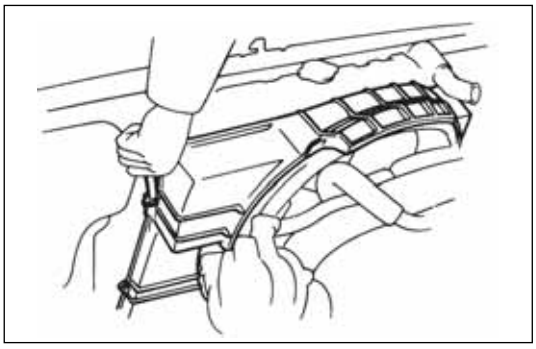

13. Radiator assembly
    (a) Mount the radiator assembly
    (b) Connect the upper and lower hoses of the radiator
    (c) Connect the overflow tank hose

14. Transmission assembly and clutch assembly
    (see page EM-31)

Engine assembly

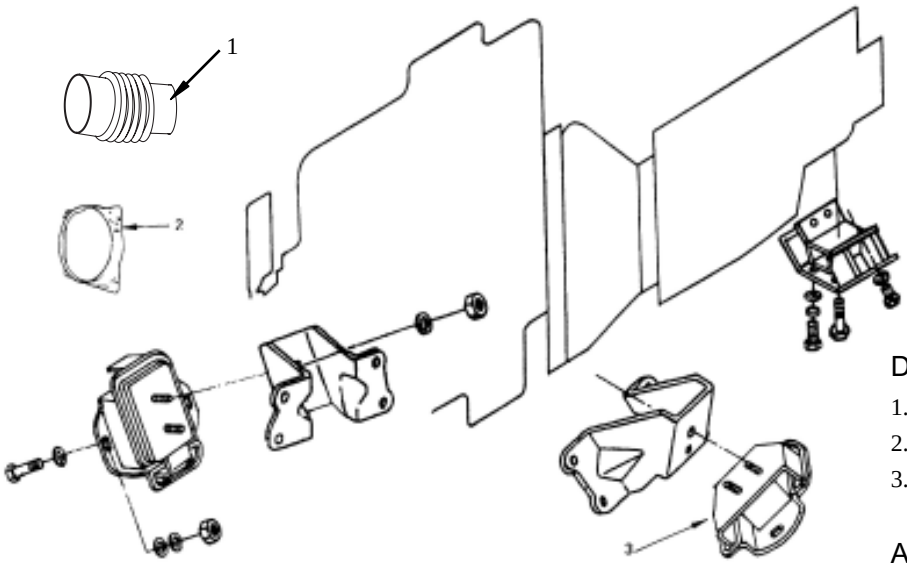

Disassembly sequence

1. air intake guide
2. fan guide shield
3. engine jaw pad

Assemble in the reverse order of disassembling.

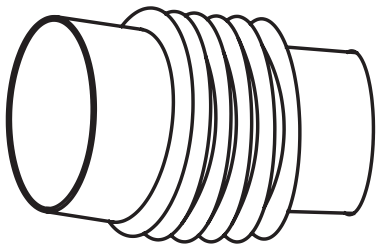

Disassembly

Preparation work

- Break the grounding cable of the storage battery
- Drain off coolant

1. Air intake guide

   Demount the air intake guide

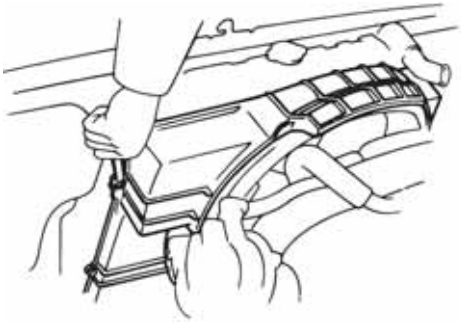

2. Fan guide shield
   (a) Disassemble the fan guide shield
   (b) Demount the upper and lower hoses of the radiator

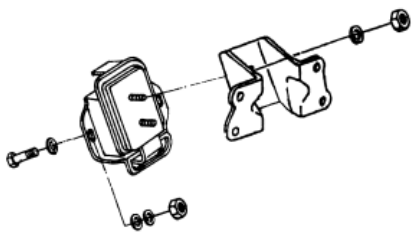

3. Engine jaw pad
   (a) Disassemble the bolts connecting the engine jaw pad and frame
   (b) Disassemble the fixing nuts of the engine jaw pad from the side of the engine bracket
   (c) Lift the engine to disassemble the engine jaw pad

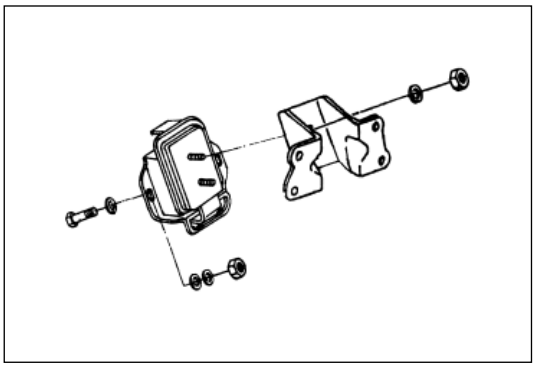

Assembly

1. Engine jaw pad
   (a) Lift the engine to mount the engine jaw pad
   (b) Tight the engine jaw pad fixing nuts and connecting bolts to the specified torque
   screw down torque of the engine jaw pad fixing nuts: 82N.m
   screw down torque of the bolts connecting the engine jaw pad and frame: 40N.m

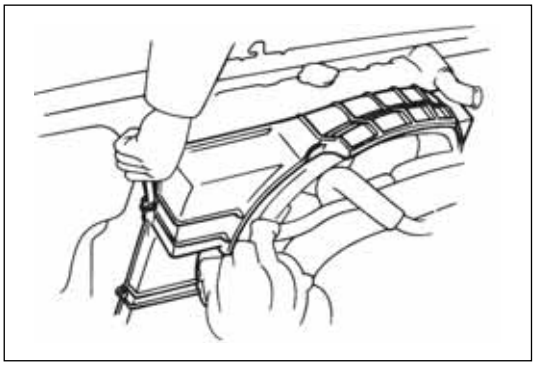

2. Fan guide shield
   Install the fan guide shield
3. Air intake guide
   (a) Install air intake guide
   (b) Connect the grounding cable of the storage battery
   (c) Add coolant
   (d) Start the engine and check whether there is leakage of the coolant

Intake manifold

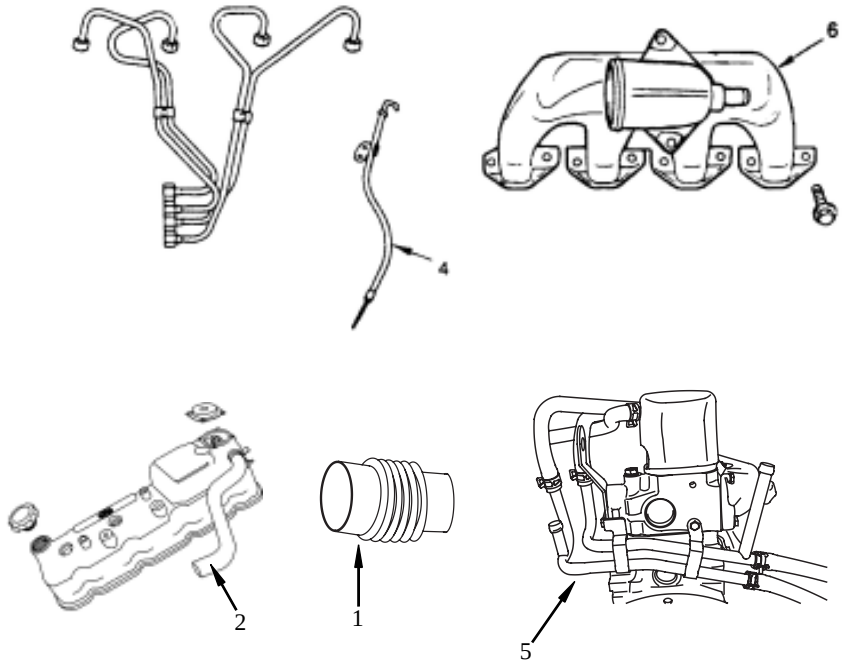

Disassembly sequence

1. air intake guide
2. crankcase vent hose
3. fuel injection pipe
4. oil measuring scale guide pipe
5. oil radiator cooling water pipe
6. intake manifold

Assembly sequence

Carry out assembly in the reverse order of disassembly

Disassembly

Preparation work

Break the grounding cable of the storage battery

Drain off coolant

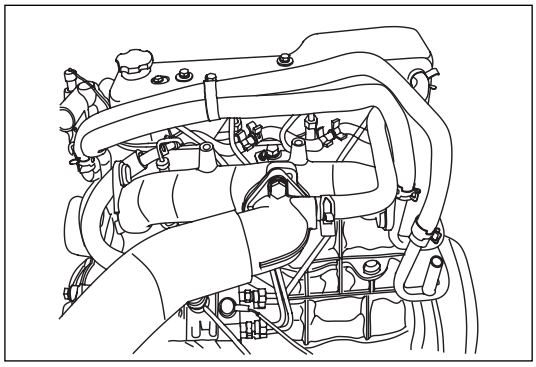

1. Air intake guide
2. Crankcase vent hose
3. Fuel injection pipe
   (a) Release the turnbuckle of the fuel injection pipe
   (b) Unscrew the conical nuts at a side of the injection pump
   (c) Unscrew the conical nuts at the side of the injector, disassemble the fuel injection pipes and put them aside
4. Oil measuring scale guide pipe

   Unscrew the fixing bolts and disassemble the oil measuring scale guide pipes

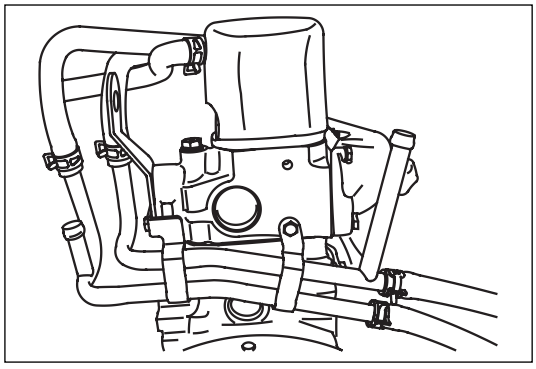

5. Oil radiator cooling water pipe
   (a) Unscrew the water pipes bracket bolts
   (b) Disassemble the oil radiator cooling water pipes
6. Intake manifold

   Unscrew the fixing bolts and nuts of the intake manifold

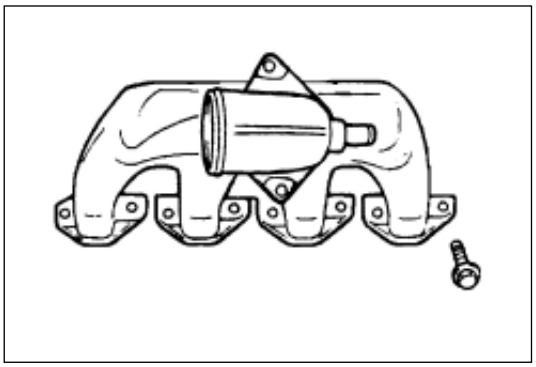

Assembly

1. Intake manifold

   Screw the fixing bolts and nuts of the intake manifold tight to the specified torque

   screw down torque :19N • m

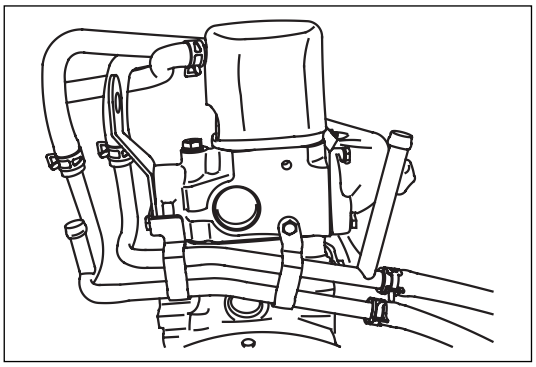

2. Oil radiator cooling water pipe
   (a) Assemble the oil radiator cooling water pipes
   (b) Screw the water pipe bracket bolts behind the cylinder cover
3. Oil measuring scale guide pipe

   Assemble the oil measuring scale guide pipes and tight them together with the intake manifold

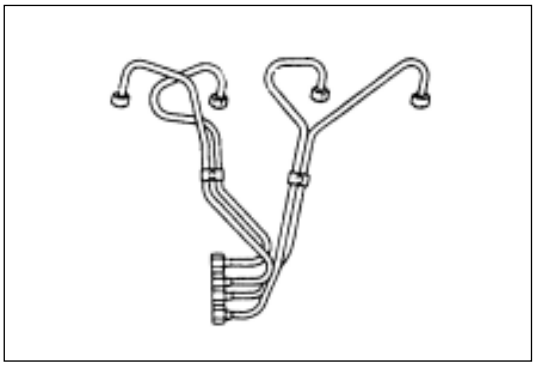

4. Fuel injection pipe fuel injection pipe
   (a) Connect the fuel injection pipe and screw the conical nuts to the specified

   screw down torque :29N • m
   (b) Assemble the turnbuckle of the fuel injection pipe to the home position

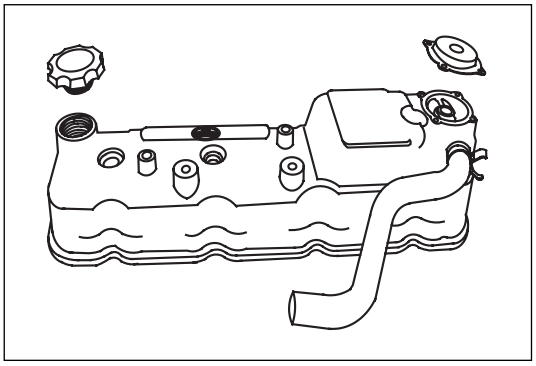

5. Crankcase vent hose

6. Air intake guide
   (a) Connect the grounding cable of the storage battery
   (b) Add coolant
   (c) Start the engine and check whether there is leakage of the coolant

Exhaust manifold

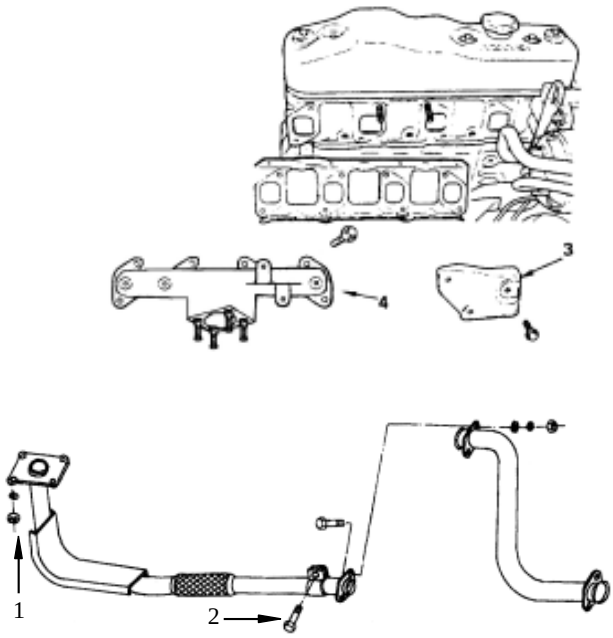

Assembly sequence

1. front exhaust pipe fixing nut
2. fixing bolt of the front exhaust pipe mounting bracket
3. heat insulation board
4. exhaust manifold

Assembly sequence

Carry out assembly in the reverse order of disassembly

Disassembly

Preparation work

- Break the grounding cable of the storage battery

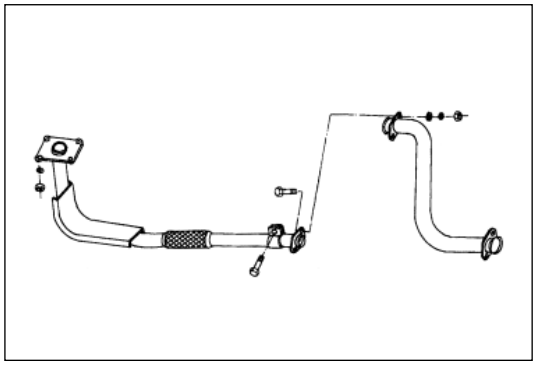

1. Front exhaust pipe fixing nut

   Demount two fixing nuts from the joint of the intake manifold and front exhaust pipe
2. Fixing bolt of the front exhaust pipe mounting bracket

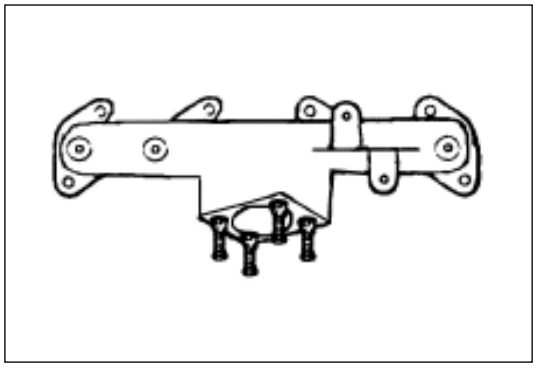

3. Heat insulation board
4. Exhaust manifold

   Demount the fixing bolts and nuts of the exhaust manifold, and then disassemble the exhaust manifold and its sealing washer.

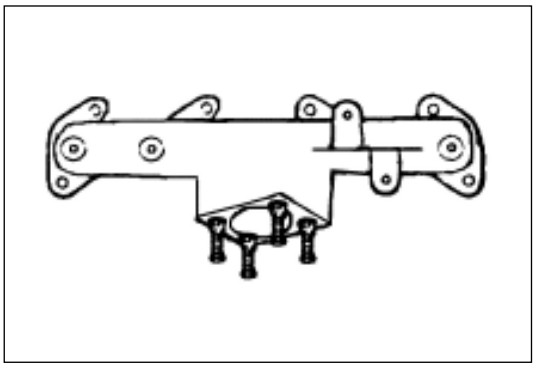

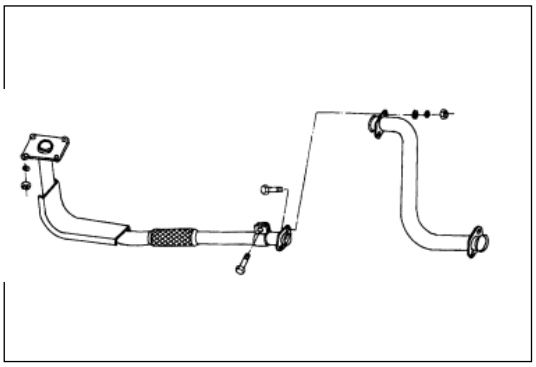

Assembly

1. Exhaust manifold

   Screw the fixing bolts and nuts of the exhaust manifold tight to the specified torque

   screw down torque :26N • m

2. Heat insulation board

   Install the heat insulation board and tight the fixing bolts to the specified torque

   screw down torque :19N • m

3. Front exhaust pipe mounting bracket fixing bolt

   Tight the bracket fixing bolts to the specified torque

   screw down torque :40N • m

4. Front exhaust pipe fixing nut

   (a) Screw the front exhaust pipe fixing nuts to the specified torque

   screw down torque :67N • m

   (b) Connect the grounding cable of the storage battery

Cylinder cover cap

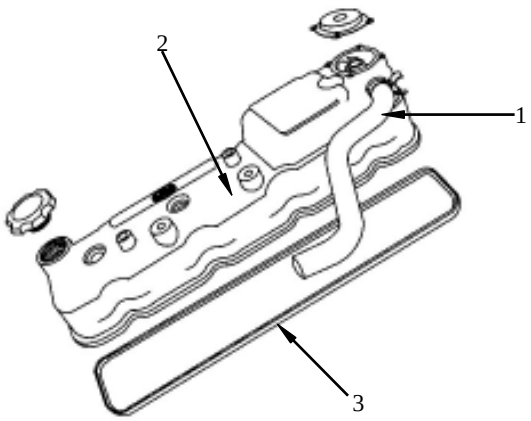

Disassembly sequence

1. crankcase vent hose
2. cylinder cover cap
3. cylinder cover cap seal.ring

Assembly sequence

Carry out assembly in the reverse order of disassembly

Disassembly

Preparation work

Break the grounding cable of the storage battery

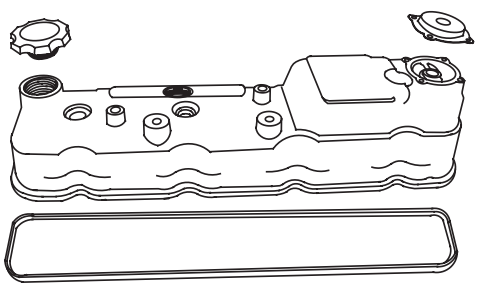

1. Crankcase vent hose

   Remove the crankcase vent hose from the intake elbow

2. Cylinder cover cap

3. Cylinder cover cap seal ring

Assembly

1. Cylinder cover cap seal ring
2. Cylinder cover cap

   (a) Oil the rocker arm and valve spring

   (b) Install the cylinder cover cap seal ring to the cylinder cover cap

   (c) The seal ring must be flat and non-destructive

   (d) Tight the fixing bolts of the valve head cap to the specified torque.

   screw down torque :13N · m

3. Crankcase vent hose

   (a) Connect the crankcase vent hose to the intake elbows.

   (b) Connect the grounding cable of the storage battery

Rockshaft assembly

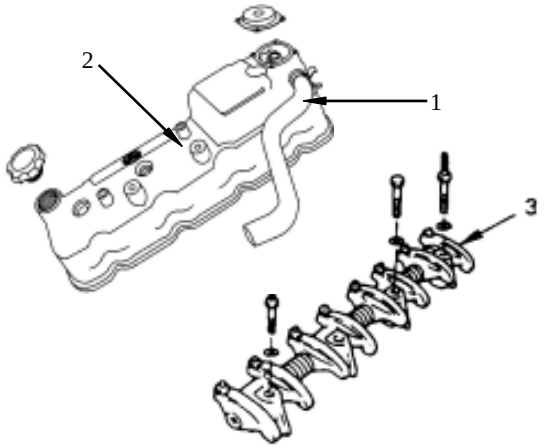

Disassembly sequence

1. crankc ase vent hose
2. cylinder cover cap
3. rockshaft assembly

Assembly sequence

Carry out assembly in the reverse order of disassembly

Disassembly

Preparation work

Break the grounding cable of the storage battery

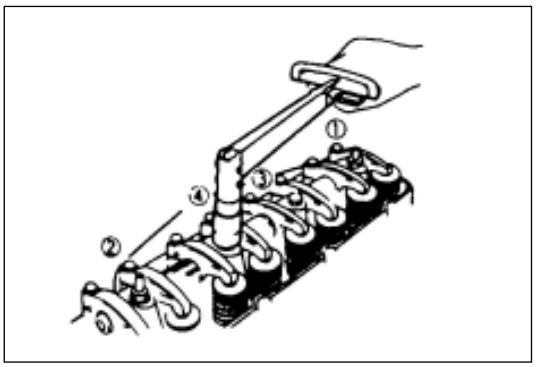

1. Crankcase vent hose
2. Cylinder cover cap
3. Rockshaft assembly

   Release the bracket nuts and fixing bolts of the rockshaft in turn, detach the rockshaft assembly.

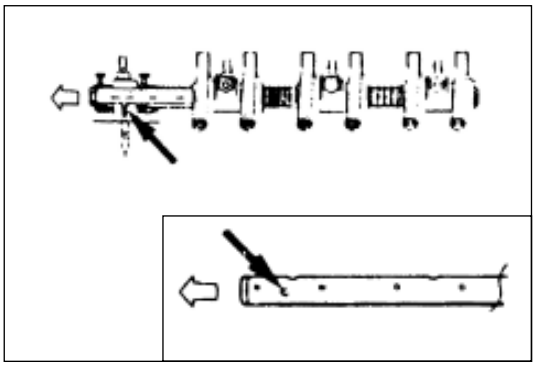

1. Rockshaft assembly
   (a) Release all the adjusting screws
   (b) Install the rockshaft to locate the big engine oil orifice (ϕ4) in the frontage of the engine

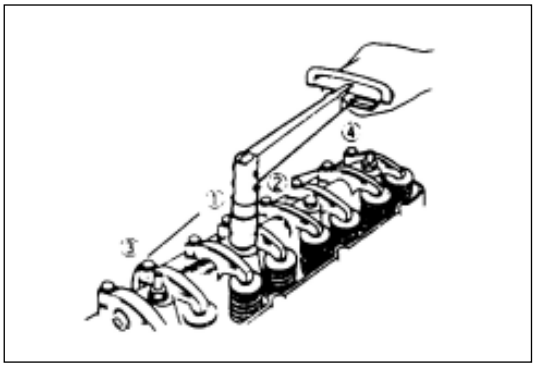

   (c) Align the bracket bolts with the holes in the rockshaft, and screw the bracket bolts to the specified torque... The sequence is shown in figure
   screw down torque :54N • m
   (d) Adjust the valve clearance

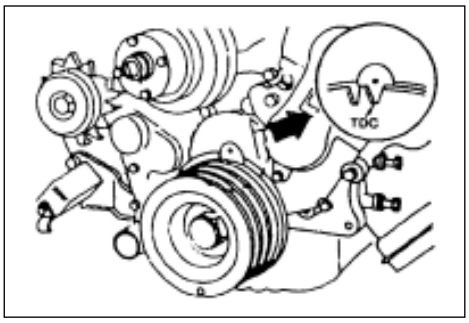

Valve clearance adjustment

(a) Rotate the crankshaft till the TDC ruling of the crankshaft vibration damper pulley aligns with the timing pointer. At this time either the first or the fourth cylinder piston locates at the top dead center (TDC) of the upstroke.

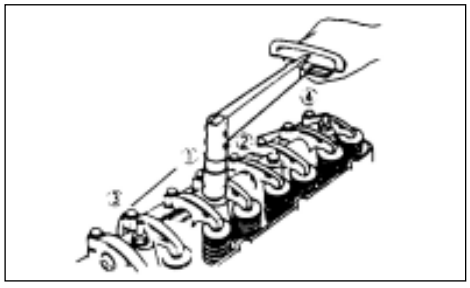

(b) Check whether the bracket nuts of the rockshaft loosens.
Tight all the loosened rockshaft bracket nuts in the order shown in figure before adjusting the valve clearance
Screw down torque :54N.m

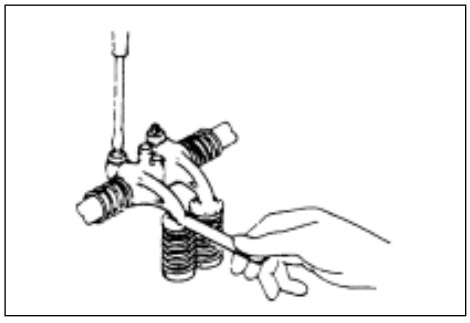

(c) Check the clearance of the first cylinder intake valve and exhaust valve tappet
If there is clearance between the first cylinder intake valve and exhaust valve tappet, then the first cylinder locates at the top dead center of the upstroke.
If the first cylinder intake and exhaust valve tappet are in the compressed state, then the fourth cylinder piston locates at the top dead center of the upstroke.
When adjusting the valve clearance of the first or the fourth cylinder, its piston must locate at the top dead center of the upstroke.
valve clearance value (in cold condition):0.4mm
Top dead center of the first cylinder upstroke

Top dead center of the first cylinder compression stroke

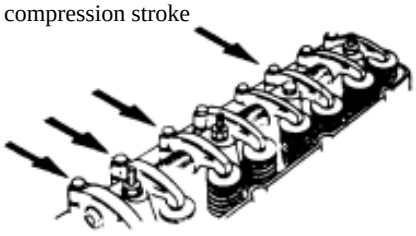

(d) Release the adjusting screws of each valve shown in figure
(e) Insert a proper clearance gauge between the rocker arm and the valve tappet end
(f) Rotate the valve clearance adjusting screw till the clearance gauge is against some resistance.
(g) Screw the lock nuts tight
(h) Rotate the crankshaft 360°
(i) Align the TDC ruling of the crankshaft vibration damper pulley with the timing pointer
The fourth cylinder upstroke top dead center

The bottom dead center of the fourth cylinder compression stroke

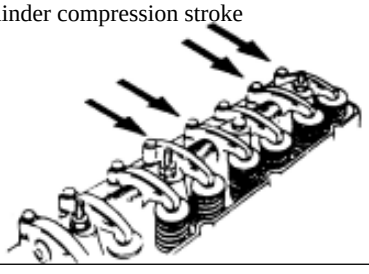

(j) Adjust the other valve clearance shown in figure

2. Cylinder cover cap
Install the cylinder cover cap and tight the fixing bolts to the specified torque
screw down torque :13N • m
3. Crankcase vent hose
Connect the grounding cable of the storage battery

Valve oil seal and valve spring

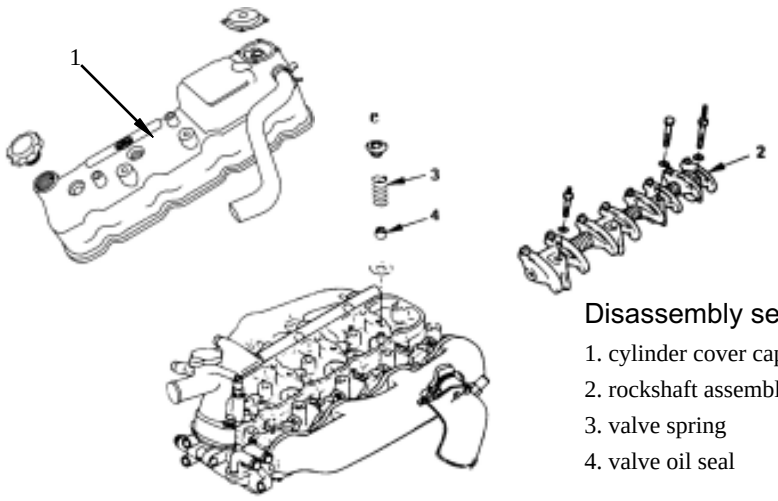

Disassembly sequence

1. cylinder cover cap
2. rockshaft assembly
3. valve spring
4. valve oil seal

Assembly sequence

Carry out assembly in the reverse order of disassembly

Disassembly

Preparation work

Break the grounding cable of the storage battery

1. Cylinder cover cap
2. Rockshaft assembly

   Release the bracket nuts and fixing bolts of the rockshaft, remove the rockshaft assembly

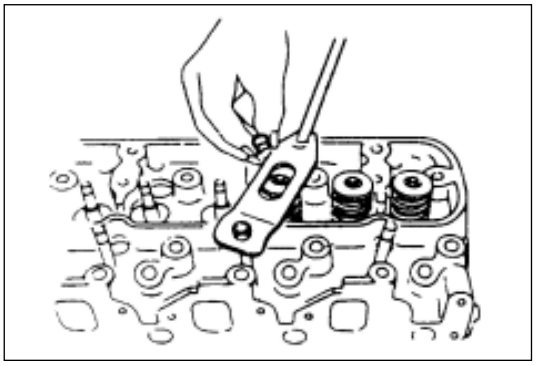

3. Valve spring

   Compress the valve springs with a special tool and remove the valve lock clamps

   valve spring compressor: 9-8523-1423-0(J-29760)

   Note:

   Place away the disassembled valve springs in the order of the cylinder serial numbers.

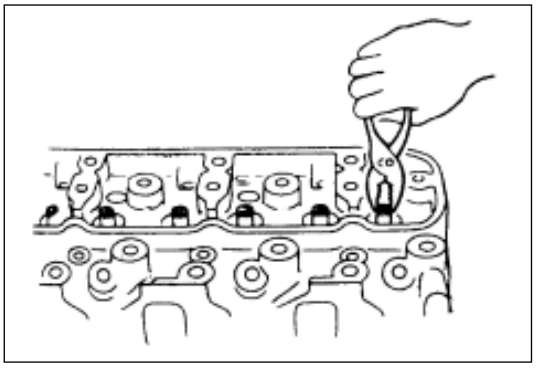

4. Valve oil seal

   Disassemble the valve oil seal with pliers

   Note:

   The disassembled valve oil seal should not be used again

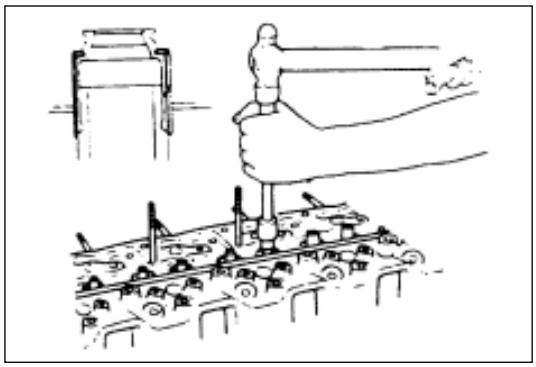

Assembly

1. Valve oil seal

   Install new valve oil seals with a special tool

   special tool: 5-8840-2033-0

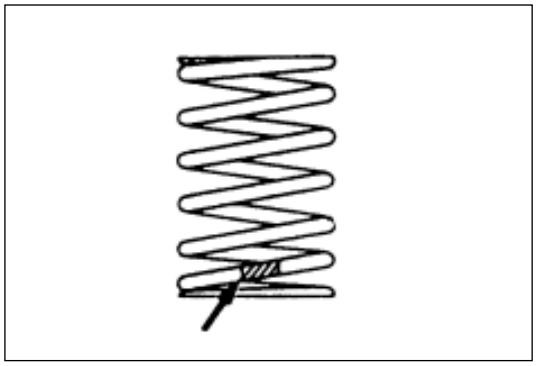

2. Valve spring

   Mount a bracket to the valve spring

   Note:

   - The painted end of the valve spring should be underneath
   - Pump compressed air into the cylinder from the preheating plug hole to force the valve to be in its position
   - Install the valve lock clamp with a special tool

   valve spring compressor: 9-8523-1423-0（J-29760）

3. Rockshaft assembly

   (see page EN-14）

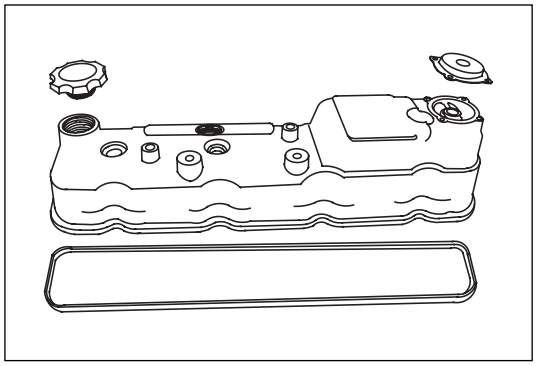

4. Cylinder cover cap

   (a) Oil the rocker arm and valve spring

   (b) Install the cylinder cover cap seal ring to the to the cylinder cover cap .

   The seal ring must be flat and non-destructive

   (c) Install the cylinder cover cap and tight the fixing bolts to the specified torque

   screw down torque :13N • m

   (d) Connect the crankcase vent hose

   (e) Connect the grounding cable of the storage battery

Cylinder cover assembly and sealing washer

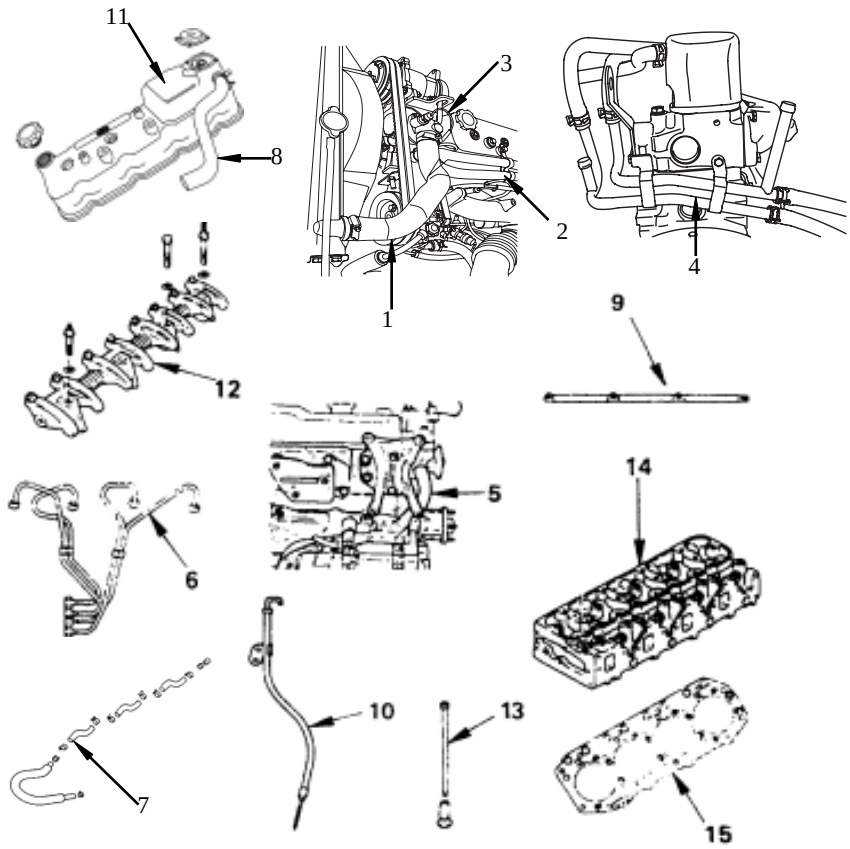

Disassembly sequence

1. radiator hose
2. heater hose
3. engine wire
4. engine oil radiator cooling water pipe
5. by-pass hose
6. fuel injection pipe
7. oil return hose
8. crankcase vent hose
9. preheating plug connecting panel
10. engine oil measuring scale guide pipe
11. cylinder cover cap
12. rockshaft assembly
13. tappet
14. cylinder cover
15. cylinder cover sealing washer

Assembly sequence

Carry out assembly in the reverse order of disassembly

Disassembly

Preparation work

- Break the grounding cable of the storage battery
- Drain off coolant

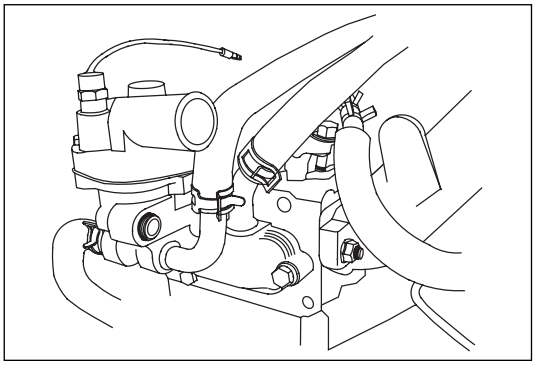

1. Radiator hose

   Remove the radiator hose from the side of the engine
2. Heater hose

   Remove the heater hoses from the engine oil radiator cooling water pipes
3. Engine wire

   Remove the wire connector from the thermostat cap assembly

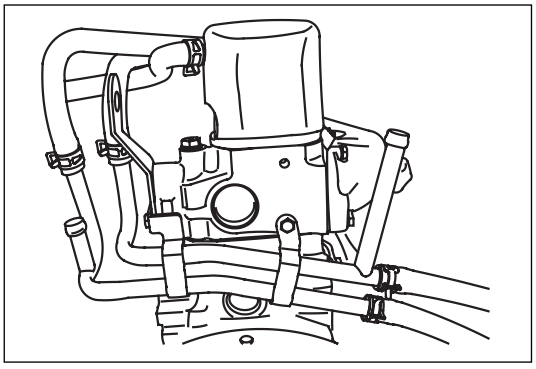

4. Engine oil radiator cooling water pipe

   (a) Disassemble the water pipe bracket fixing bolts in the backside of the cylinder cover

   (b) Remove the engine oil radiator cooling water pipes

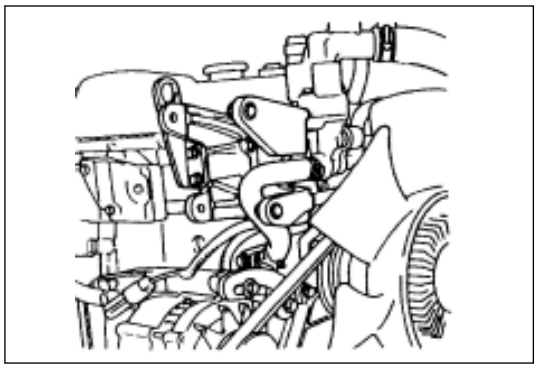

5. By-pass hose

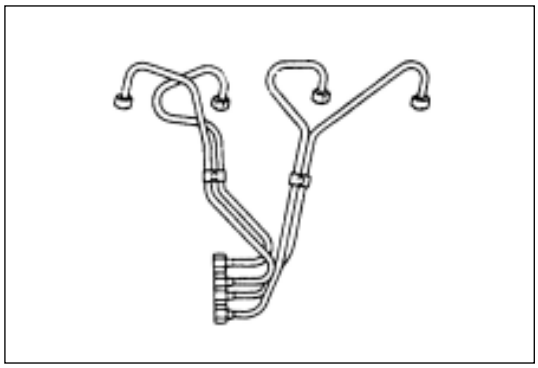

6. Fuel injection pipe
   (a) Release the turnbuckle of the fuel injection pipe
   (b) Release the conical nuts at the side of the injection pump
   (c) Unscrew the conical nuts at the side of the injector and disassemble the fuel injection pipes

   Note:

   Plug up the orifices of the injector and the delivery valve to prevent foreign substances from entering them.
7. Oil return hose

   Disassemble the oil return hose at the side of the injector

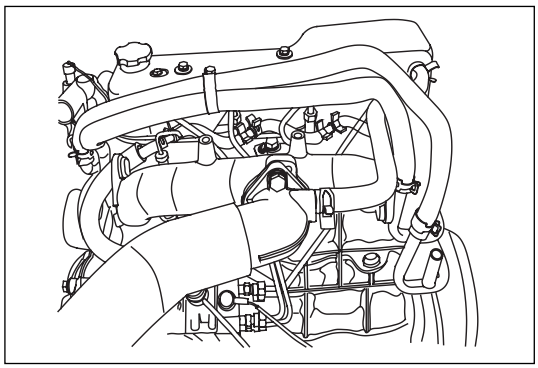

8. Crankcase vent hose

   Remove the crankcase vent hose from the intake elbow
9. Preheating plug connecting panel

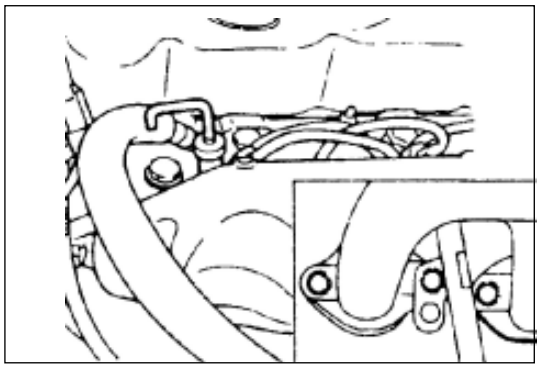

10. Engine oil measuring scale guide pipe

    Remove the engine oil measuring scale guide pipe from the cylinder cover

11. Cylinder cover cap

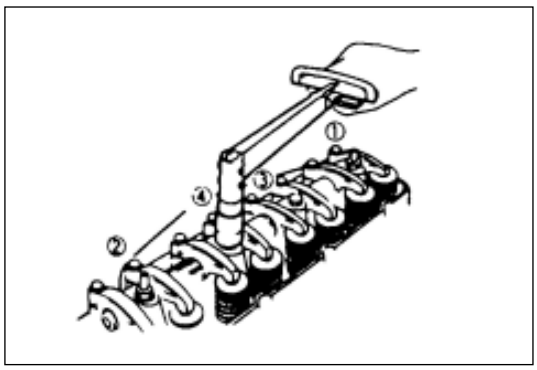

12. Rockshaft assembly

    Release bracket bolts of the rockshaft, a little each time. The sequence is shown in figure

    Note:

    If the rockshaft bracket bolts are not unscrewed a little each time, the rockshaft may be damaged

13. Tappet

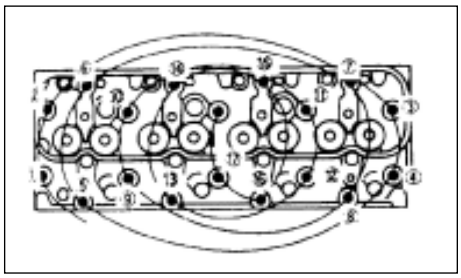

14. Cylinder cover

Release the cylinder cover bolts, a little each time. The sequence is shown in figure

Note:

If the cylinder cover bolts are not unscrewed a little each time, it will go against the undersurface of the cylinder cover

4D28

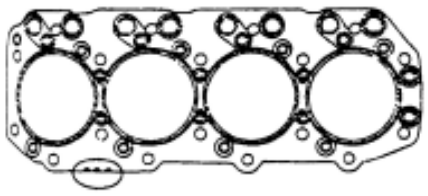

Assembly

1. Cylinder cover sealing washer

The selection of the cylinder cover sealing washer is decided by the bulging that the top of the piston protrudes the upper surface of the block

To improve the performance of the engine, three kinds of washer of different thickness are provided to select.

Select a proper washer according to the following methods

Clean the carbon on the piston top and the upper surface of the block before measurement. And clean the surfaces mounted sealing washers

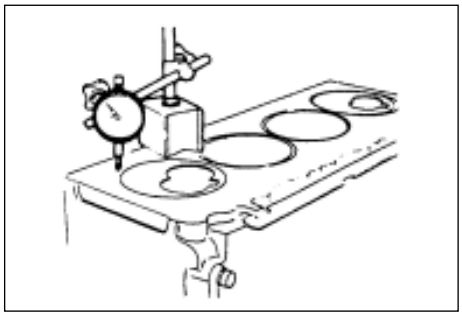

(1) The measurement of the bulging of the top of piston

(a) Measure the bulging of piston with a dial measuring gauge

(b) The measuring position of the bulging of the piston top refers to the left figure

All the measuring positions should get as close as possible to the block

(c) Measure point 1),2),3),4)and calculate two differentials 1)-2) and3)-4)of each cylinder

(d) Get the maximum from the four cylinders

(e) Select the assortment of the sealing washer needed according to the maximum and the chart below

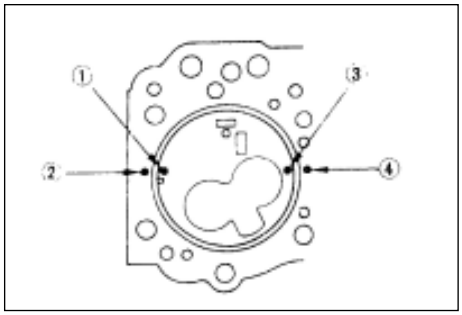

The thickness of 4D28 cylinder cover sealing washer mm

The No.of sealing washer		The piston top bulging	The thickness of the sealing washer
(A)		0.758-0.813	1.50
(B)		0.813-0.859	1.55
(C)		0.859-0.914	1.60

Note:

The piston top bulging differential of the minimum and maximum must not be over 1.0mm.

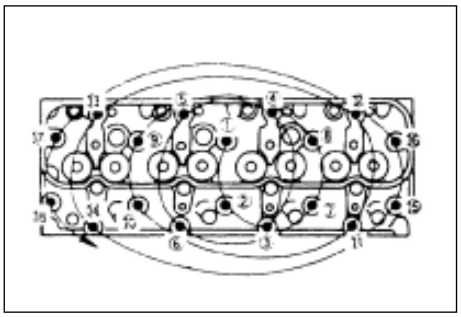

2. Cylinder cover

(a) Install set pin of cylinder cover to the block

(b) Install the cylinder cover sealing washer and make the mark on its top be upward

(c) Clean the fitting surface of the cylinder cover and the block, mount the head slightly

(d) Oil the screws of the cylinder cover bolts and the fitting surfaces

(e) Tight the cylinder cover bolts to the specified torque according to the serial numbers in the figure within three steps

the torque of the cylinder cover bolt N • m

The first step	The second step	The third step
49	60-75°	60-75°

3. Tappet
   Oil the tappet and insert it into the cylinder cover
4. Rockshaft assembly
   (see page EN-14)

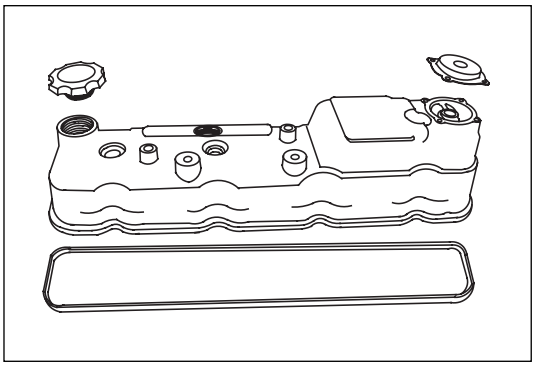

5. Cylinder cover cap
   (a) Oil the rocker arm and valve spring
   (b) Install the cylinder cover cap seal ring to the cylinder cover cap
   (c) The seal ring must be flat and non-destructive
   (d) Tight the fixing bolts of the valve head cap to the specified torque.
   screw down torque :13N • m

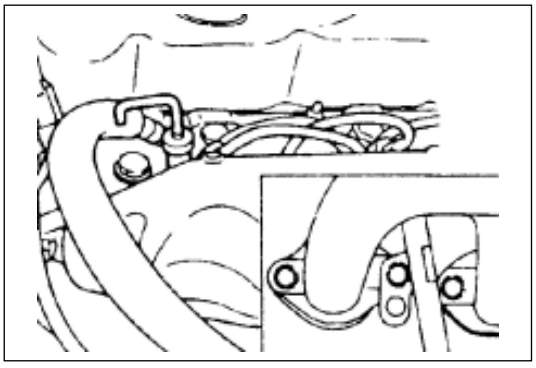

6. Engine oil measuring scale guide pipe
   Tight the fixing bolts of the engine oil measuring scale guide pipe to the specified torque
   screw down torque :19N • m
7. Preheating plug connecting panel

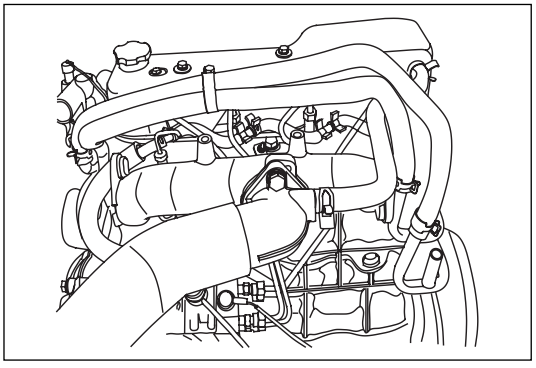

8. Crankcase vent hose
9. Oil return hose
   Install the oil return hose with a new copper washer

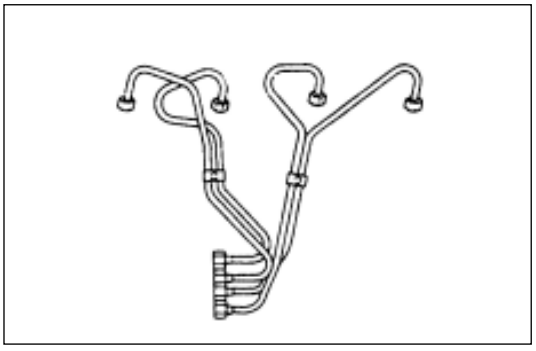

10. Fuel injection pipe
    (a) Install the conical nut to the side of the injection pump and the injector.
    (b) Tight the conical nuts to the specified torque
    screw down torque :29N • m
    (c) Install the turnbuckles of the pipes under the specified torque
11. By-pass hose

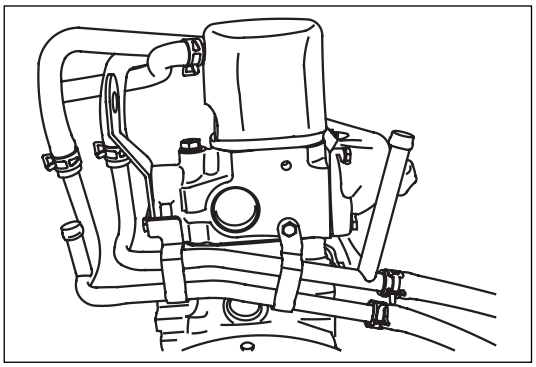

12. Engine oil radiator cooling water pipe

    Screw the water pipe bracket bolts to the specified torque

    screw down torque :19N • m

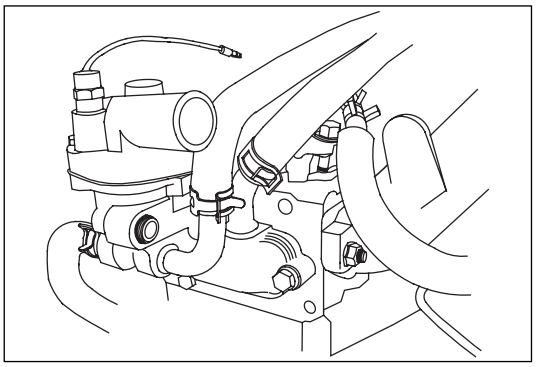

13. Engine wire

    Connect the wires of the coolant temperature sensor and the thermometer assembly

14. Heater hose

    Install the heater hose and then screw the turnbuckle firmly

15. Radiator hose

    (a) Connect the radiator hose and then screw the turnbuckle firmly

    (b) Connect the grounding cable of the storage battery

    (c) Add coolant

    (d) Start the engine and check whether there is leakage of coolant

Timing gear

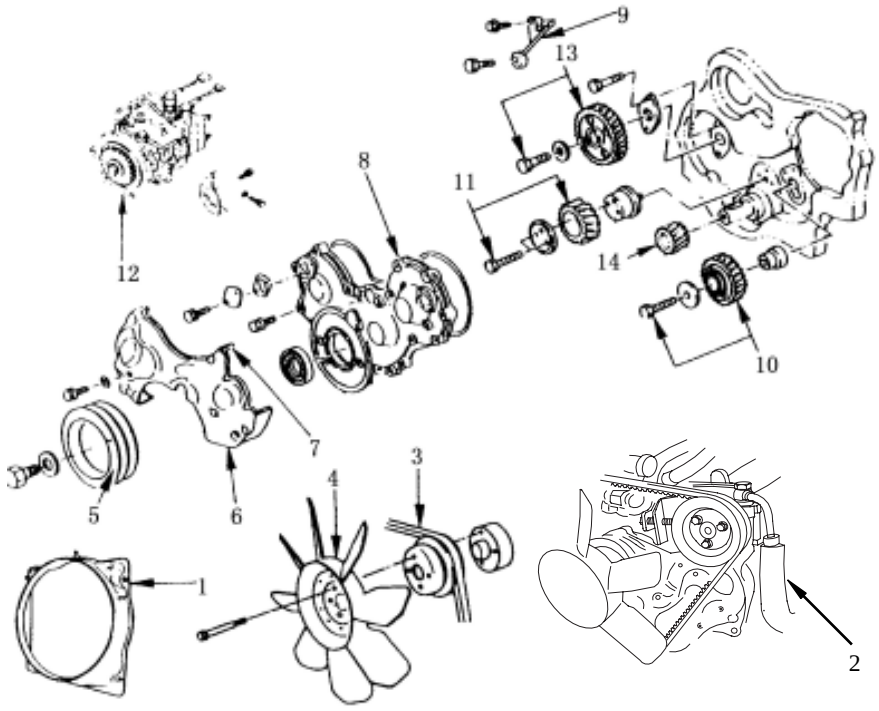

Disassembly sequence

1. fan guide shield
2. power steering pump driving belt
3. AC-generator driving belt
4. cooling fan assembly
5. crankshaft vibration damper pulley
6. acoustic hood
7. acoustic hood gasket
8. timing gear cover
9. timing gear pipe.
10. idle gear ìBî
11. idle gear ìAî
12. injection pump assembly
13. camshaft timing gear
14. crankshaft timing gear

Assembly sequence

Carry out assembly in the reverse order of disassembly

Disassembly

Preparation work

- Break the grounding cable of the storage battery.
- Drain off coolant

1. Fan guide shield
2. Power steering pump driving belt

   Unscrew the bracket bolts and adjusting bolts of the power steering pump and then disassemble the driving belts
3. AC-generator driving belt

   Release the bracket bolts (the lower side) of the AC-generator and lock bolts of the adjustment plate and disassemble the driving belts
4. Cooling fan assembly

   Disassemble the lock nuts, and disassemble the cooling fan assembly and the water pump pulley
5. Crankshaft vibration damper pulley
6. Acoustic hood
7. Acoustic hood gasket
8. Timing gear cover
9. Timing gear pipe.

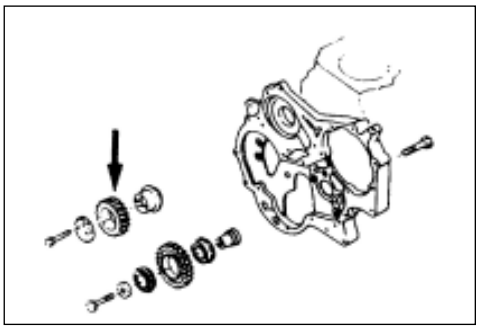

10. Idle gear "B"
    (a) Measure the clearance of the camshaft timing gear and crankshaft timing gear before disassembling the idle gears
    (b) Measure the axial clearance of the idle gears before disassembling them

Note:
On the details of the measurement of the gear clearance and axial clearance, please refer to the following items

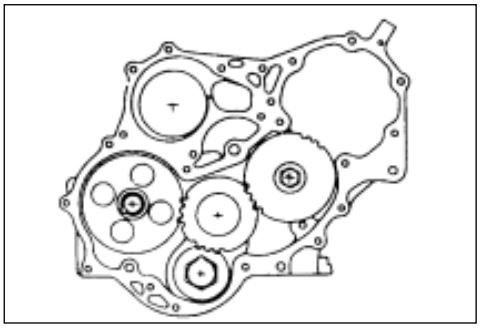

(1) Timing gear clearance measurement
(a) Mount a dial measuring gauge on the measured timing gear Fix the measured gear and gears connecting to it
(b) Hunt the measured gear to the left and right as much as possible Obtain the reading of the dial measuring gauge
If the measured value exceeds the specified limit, the timing gear must be replaced

timing gear clearance mm

Standard	Limitation
0.10-0.17	0.30

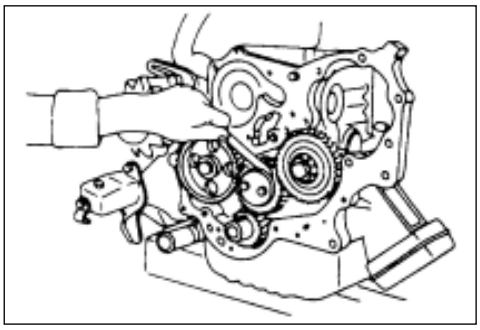

(2) Idle gear "A" axial clearance measurement
Insert a clearance gauge between the idle gears and stop ring to measure its axial clearance
If the measured value exceeds the specified limit, then the stop ring must be replaced

timing gear clearance mm

Standard	Limitation
0.07	0.20

11. Idle gear "A"

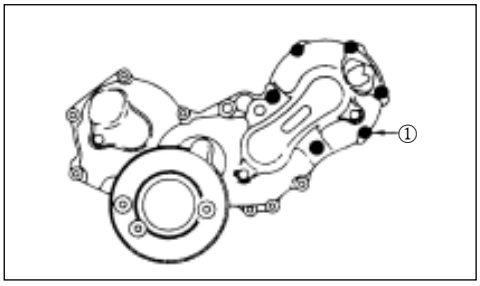

12. Injection pump assembly
    (a) Disassemble six injection pump bracket bolts 1) from the timing gear housing

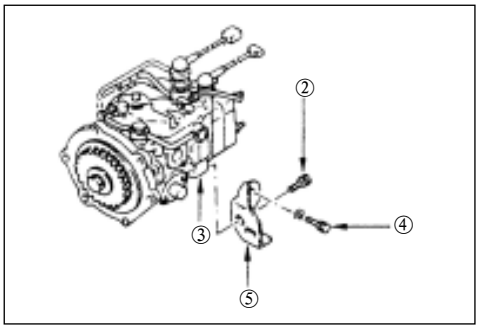

(a) Disassemble injection pump rear bracket bolts 2)from the injection pump bracket 3)
(b) Disassemble injection pump rear bracket bolts 4) and bracket 5) from the housing
(c) Pull out the injection pump and the injection pump timing gear together towards the backside of the engine

Note:
Plug up the orifices of the injection pump and delivery valve with cap or its equivalent to prevent foreign substances from entering them

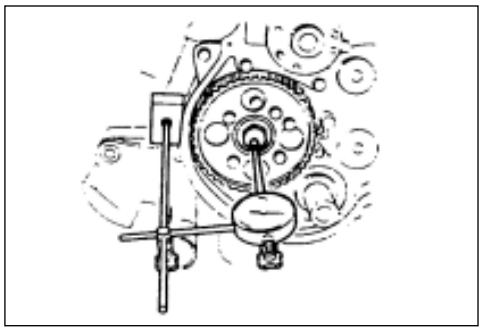

13. Camshaft timing gear

(a) Measure the axial clearance of camshaft with a dial measuring gauge

Do this work before disassembling camshaft timing gear

If the clearance of the camshaft exceeds the specified limit, the thrust plate must be replaced.

camshaft axial clearance mm

Standard	Limitation
0.050-0.114	0.20

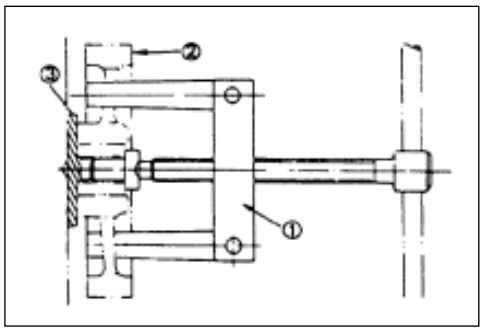

(a) Unscrew camshaft timing gear bolts from the camshaft.

Note:

Keep the camshaft fixed from rotating

(b) Pull the camshaft timing gear2)out with general utility puller 1)

general utility puller: 5-8521-0002-0

(c) Disassemble the thrust plate3)

14. Crankshaft timing gear

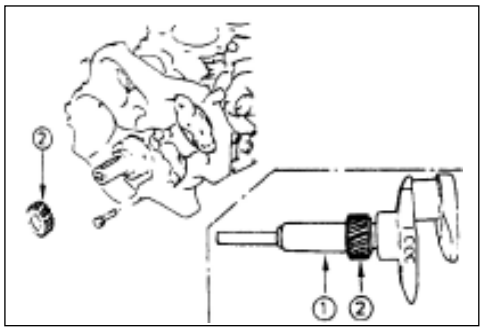

Assembly

1. Crankshaft timing gear

(a) Install crankshaft timing gear

(b) Install the crankshaft timing gear 2) with crankshaft fixing tool 1) The mark "X-X" of the crankshaft timing gear must be outward

crankshaft gear fixing tool: 5-8522-0020-0

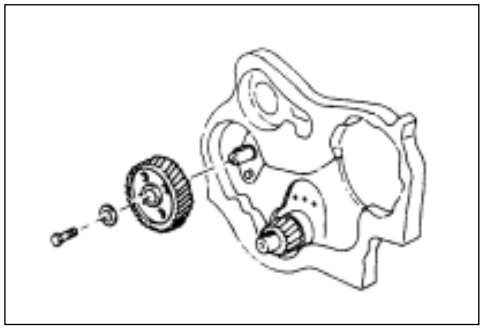

2. Camshaft timing gear

(a) Mount the thrust plate to the housing

(b) Screw the fixing bolts of the thrust plate to the specified torque

screw down torque :19N • m

(c) Install the camshaft timing gear to the camshaft

The mark "Y-Y" of the camshaft timing gear must be outward

(d) Tight the fixing bolts of the camshaft timing gear to the specified torque

screw down torque: 85N • m

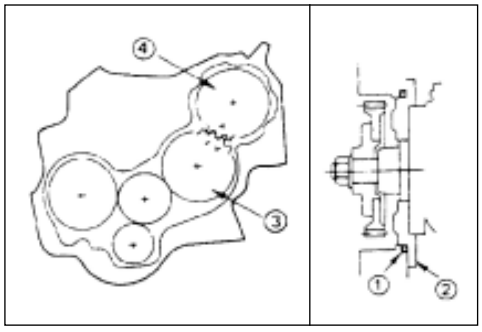

3. Injection pump assembly

(a) Install the O-ring 1)to the injection pump flange 2)

(b) Install the injection pump to the timing gear housing

Align the mark"V-V" of the idle gear "B" 3) with the mark "V" of the injection pump timing gear 4)

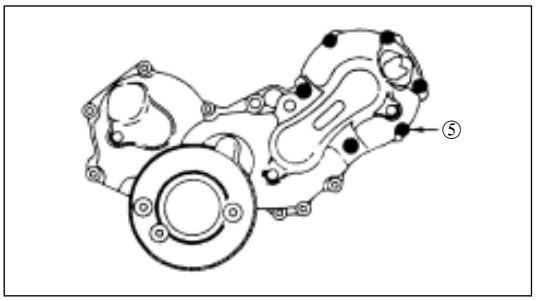

(c) Tight six injection pump bracket bolts5)temporarily
After screwing the injection pump rear bracket bolts, tight the bracket bolts of the injection pump at last

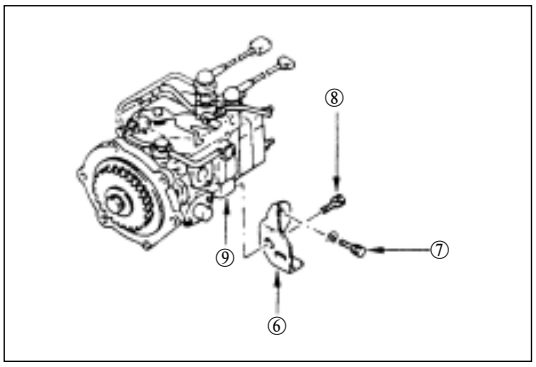

(d) Install the injection pump rear bracket 6) and rear bracket bolt 7)to the housing
Install the rear bracket bolt 8) to the injection pump bracket 9)
Screw the rear bracket bolts 7) and 8)to the specified torque after tighting the injection pump nuts

(e) Tight the injection pump nuts to the specified torque
screw down torque :15N • m

(f) Screw the injection pump bracket bolts to the specified torque
screw down torque :19N • m

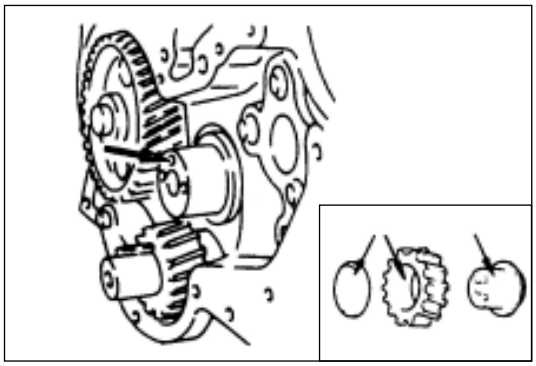

4. Idle gear “A”

(a) Oil the idle gear “A” and its shaft
The oil orifice in the idle gear shaft must be upward

(b) Place the gear “A” to direct the marks “X” and “Y” toward the frontage of the engine

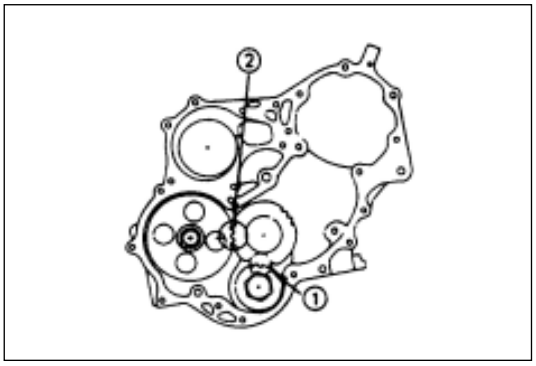

(c) Align the mark “X” of the idle gear with the mark “X-X” of the crankshaft timing gear1)
Align the mark“Y” of the idle gear “A” with the mark “Y-Y” of the camshaft timing gear 2)

(d) Install the stop ring and idle gear bolts to the housing. The oil orifice in the stop ring must be upward. The chamfer of the stop ring must be outward

(e) Screw the idle gear “A” fixing bolts to the specified torque
screw down torque :19N • m

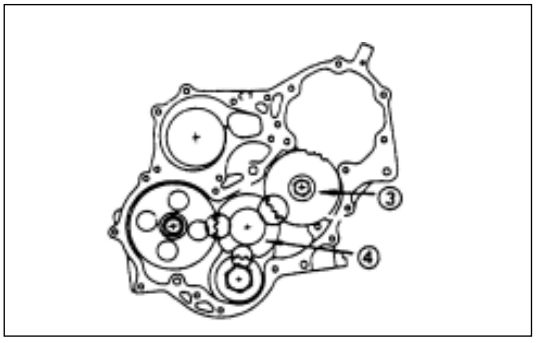

5. Idle gear “B”

(a) Cover the idle gear “B” and its shaft with oil

(b) Align the mark “Z” of the idle gear “B” 3) with the mark “Z-Z” the idle gear “A” 4)

(c) Tight the idle gear îBîfixing bolts to the specified torque
screw down torque:76N • m

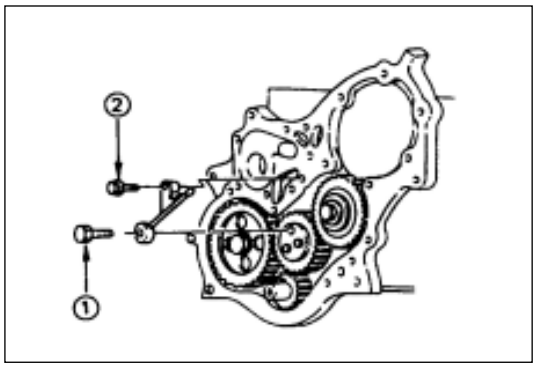

6. Timing gear pipe.
   (a) Install the timing gear pipe to the timing gear housing and idle gear "A"
   (b) Tight the pipe eye bolt 1) and fixing bolt 2) to the specified torque
   screw down torque of the pipe eye bolt:13N • m

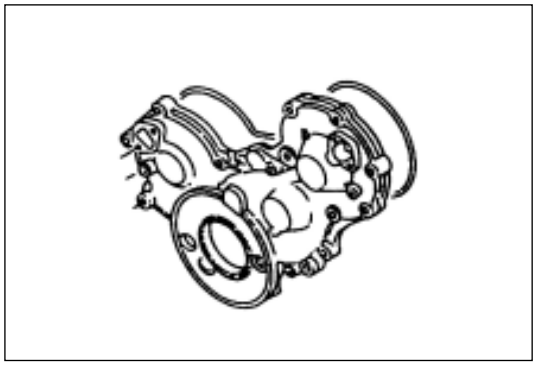

7. Timing gear cover
   (a) Align set pin of the timing gear cover with the timing gear cover, and then mount the timing gear cover
   (b) Screw the fixing bolts of the timing gear cover to the specified torque
   screw down torque :19N • m
8. Acoustic hood gasket
9. Acoustic hood

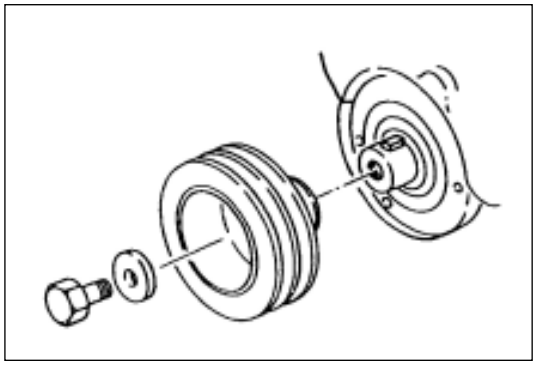

10. Crankshaft vibration damper pulley
    Tight the fixing bolts of the crankshaft vibration damper pulley to the specified torque
    screw down torque :206N • m
    Note:
    Fix the flywheel ring gear to prevent the crankshaft from spinning when tighting the bolts of the crankshaft vibration damper pulley
11. Cooling fan assembly
    Install the water pump pulley and the cooling fan assembly to the water pump, tight the lock nuts to the specified torque
    screw down torque :8N • m
12. AC-generator driving belt
    (a) Mount driving belts of the AC-generator and adjust the belt tightening
    (b) Press the middle of the driving belts with 98N force
    driving belt flexibility :(8-12)m
13. Power steering pump driving belt
    (a) Mount driving belts of the power steering pump and adjust the belt tightening
    (b) Press the middle of the driving belts with 98N force driving belt flexibility :(8-12)mm
14. Fan guide shield
    (a) Install the fan guide shield and overflow tank hose.
    (b) Add coolant
    (c) Start the engine and check whether there is leakage of coolant

Engine oil filter assembly

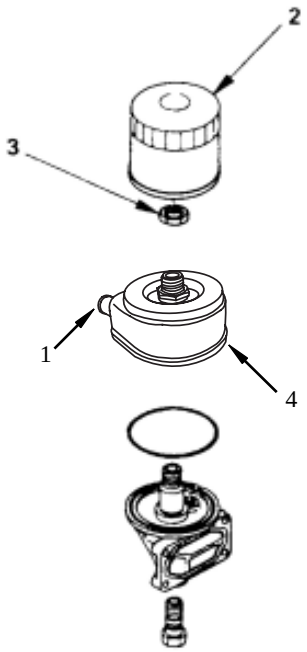

Disassembly sequence

1. water tube hose
2. engine oil filter
3. engine oil radiator fixing nut
4. engine oil radiator

Assembly sequence

Carry out assembly in the reverse order of disassembly

Disassembly

Preparation work

- Break the grounding cable of the storage battery
- Drain off coolant
- Place a container under the engine oil filter to collect engine oil

1. Water tube hose

   Release the intake and exhaust hoses of the engine oil radiator

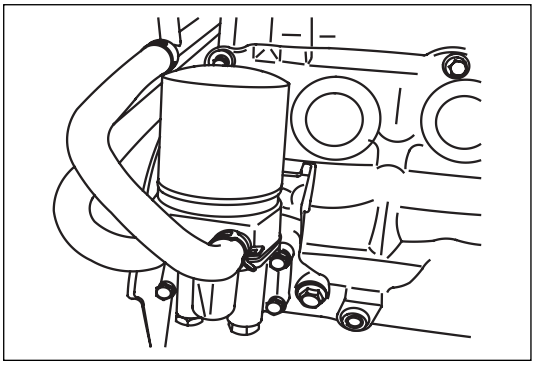

2. Engine oil filter

   Disassemble the engine oil filter with a filter wrench

   filter wrench: 5-8840-0200-0
3. Engine oil radiator fixing nut
4. Engine oil radiator

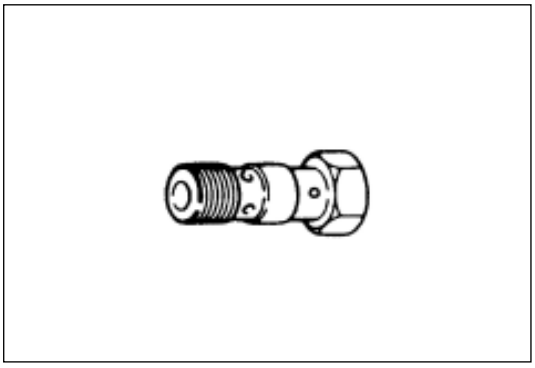

Check

(1) Safety valve

(a) Install an engine oil pressure gauge in engine oil passage near the engine oil filter

(b) Start the engine to check the opening pressure of the safety valve

pressure:(422-461) kPa

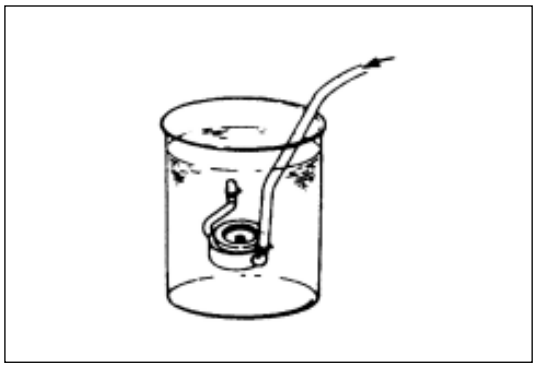

(2) Engine oil radiator

Check whether there is leakage of the radiator water channel

(a) Plug up one end of the engine oil radiator water channel

(b) Submerge the engine oil radiator into water. Aerate the other end of the engine oil radiator water channel with compressed air (19.60kPa), if there are bulbs rising to the water surface, that proves the water channel leaks.

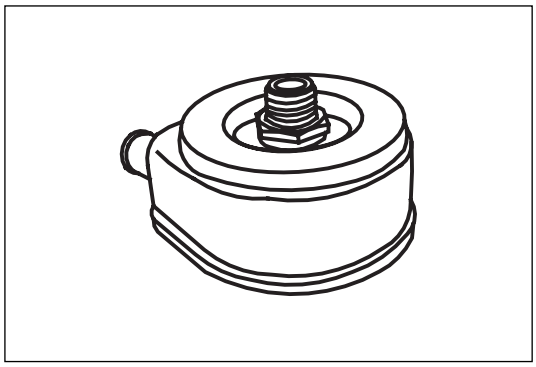

Assembly

1. Engine oil radiator

Install the O ring to the engine oil filter and assemble the engine oil radiator

2. Engine oil radiator fixing nut

Screw the engine oil radiator fixing nuts to the specified torque

screw down torque :29N • m

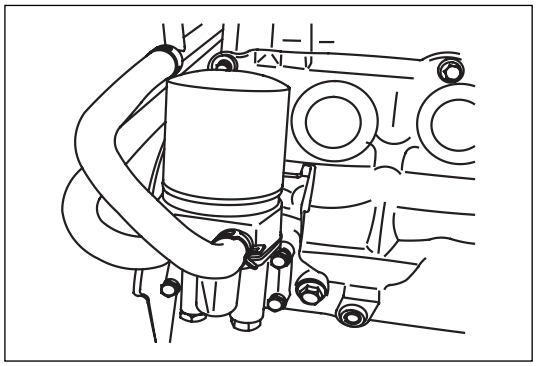

3. Engine oil filter

(a) Oil the O-ring of the engine oil filter with a thin layer

(b) Screw the new engine oil filter into the engine oil filter base manually till the sealing area is oppressed to the O-ring

(c) Screw the engine oil filter 1.25 turns more with a filter wrench

4. Water tube hose

(a) Connect the intake and oil return hose of the engine oil radiator

(b) Connect the grounding cable of the storage battery

(c) Add coolant

(d) Start the engine and check whether there is leakage of the engine oil radiator

Flywheel and transmission primary shaft front-bearing

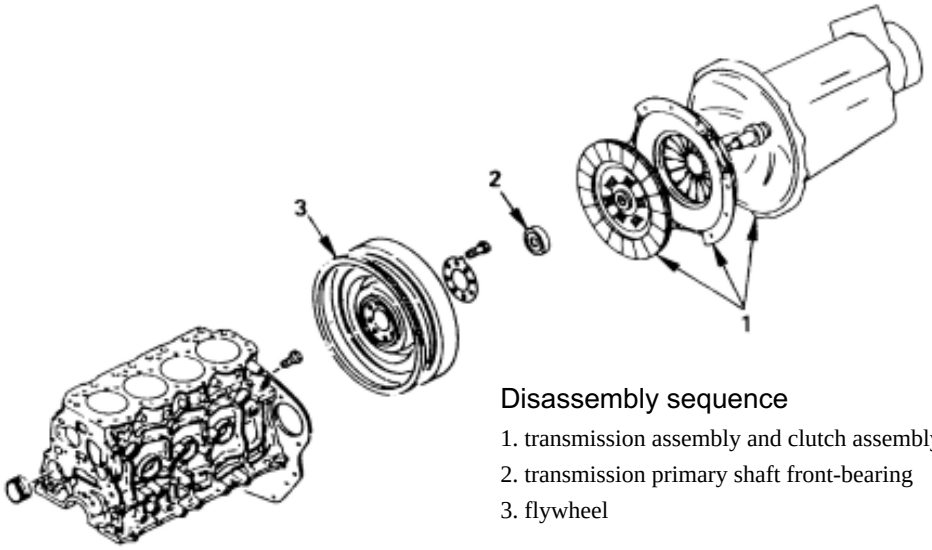

Disassembly sequence

1. transmission assembly and clutch assembly
2. transmission primary shaft front-bearing
3. flywheel

Assembly sequence

Carry out assembly in the reverse order of disassembly

Disassembly

Preparation work

Break the grounding cable of the storage battery

1. Transmission assembly and clutch assembly

Raise the car and sustain it with a proper secure bench

(1) Transmission assembly

(a) Demount the propeller-shaft on the flange yoke

(b) Remove the transmission assembly

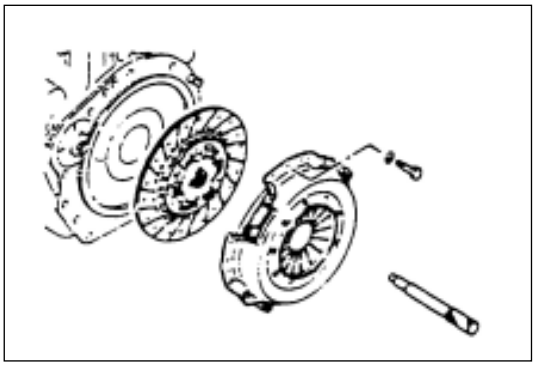

(2) Clutch assembly

Note: Donít leave clutch liquid on the paint surface, flush it away immediately

1) Platen assembly

2) Clutch plate assembly

(a) Use guiding plummet to avoid clutch plate assembly falling freely

guiding plummet：5-5825-3001-0

(b) Mark on the flywheel flange and the platen flange for alignment when mounting

(c) Release platen assembly fixing bolts, remove clutch assembly

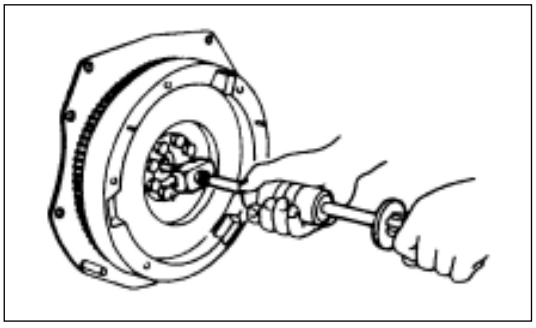

2. Transmission primary shaft front-bearing

Disassemble the transmission primary shaft front-bearing with a bearing extractor and a sliding hammer transmission primary shaft front-bearing extractor: 5-8840-2000-0

sliding hammer: 5-8840-0019-0

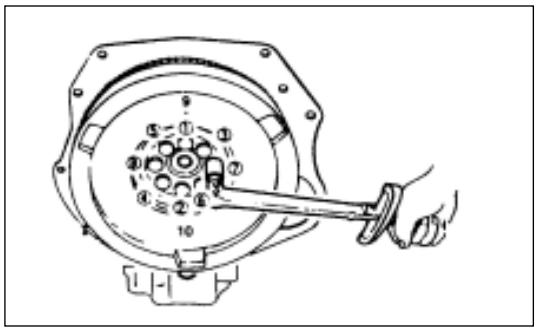

3. Flywheel
   (a) Assemble flywheel retaining device
   (b) Unscrew fixing bolts of the flywheel and then disassemble the flywheel

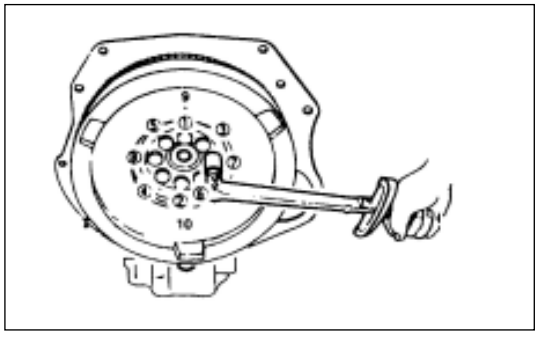

Assembly

1. Flywheel
   (a) Cover the flywheel bolts with engine oil
   (b) Tight flywheel bolts to the specified torque in two steps with angle-tight method, and the sequence is shown in figure.

   flywheel bolt torque N • m

The first step(pre-tighten torque)	The second step(final bolt torque)
59	60-90°

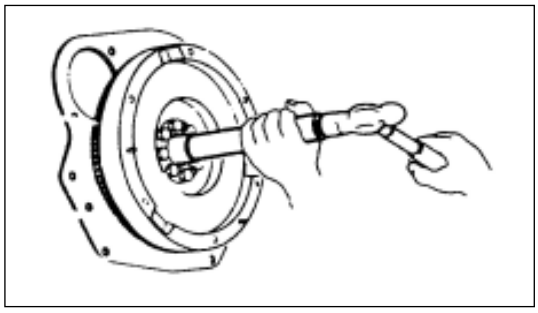

2. Transmission primary shaft front-bearing

   Install the transmission primary shaft front-bearing with a bearing assembler

   bearing assembler of the transmission primary shaft front bearing:5-8522-0024-0

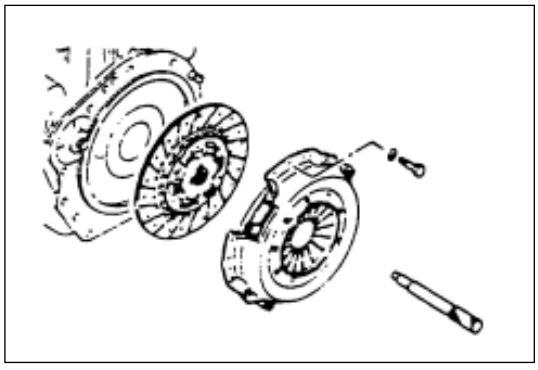

3.
   (1) Clutch
   1) Clutch plate assembly
   (a) Cover multiple spline of clutch plate hub with multifunctional molybdenum disulphide grease
   (b) Mount the clutch plate assembly with a guiding plummet
   guiding plummet：5-5825-3001-0

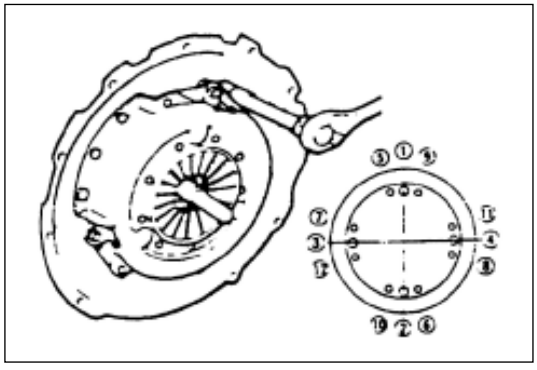

   2) Platen assembly
   (a) Tight platen assembly fixing bolts in the order shown in figure to the specified torque
   screw down torque :18N • m
   (b) Detach the guiding plummet

   Note:If a new platen is installed,after tighting the planten fixing bolts to the specified torque,the wire guarding the diaphragm spring must be detached

   (2) Transmission assembly
   (a) Assemble the transmission assembly
   (b) Install the propeller-shaft

Engine oil pump assembly

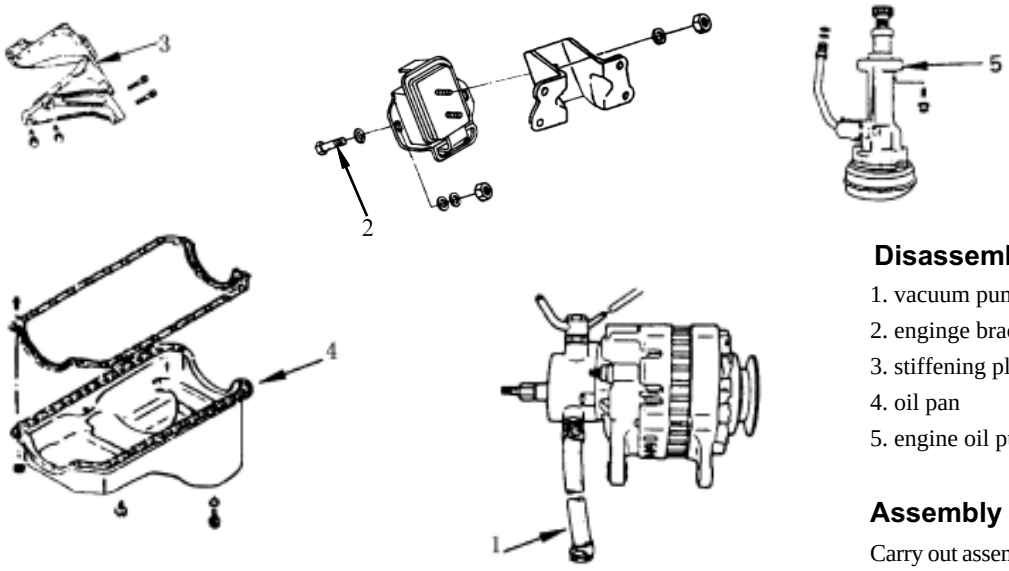

Disassembly sequence

1. vacuum pump engine oil hose
2. enginge bracket bolt
3. stiffening plate and rubber packing
4. oil pan
5. engine oil pump assembly

Assembly sequence

Carry out assembly in the reverse order of disassembly

Disassembly

Preparation work

Break the grounding cable of the storage battery

Lift the car

Drain off engine oil

Note:

Install a new washer of oil drain plug

oil drain plug screw down torque:83N • m

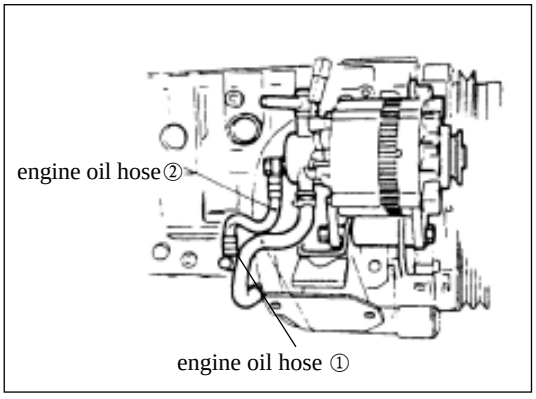

1. Oil hose of vacuum pump
   (a) Remove the engine oil hose ① from the oil pan
   (b) Remove the engine oil hose ② from the housing

2. Enginge bracket bolt
   Release engine bracket bolts and disassemble the engine bracket

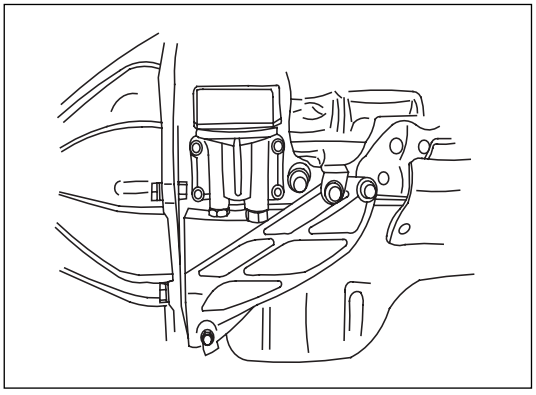

3. Stiffening plate and rubber packing
   (a) Disassemble exhaust manifold bracket
   (b) Disassemble stiffenning plate from the oil pan
   (c) Take out rubber packing
4. Oil pan
   (a) Lift the engine for about 50 mm
   (b) Remove the oil pan from the housing
5. Engine oil pump assembly
   Remove the engine oil pump assembly from the housing

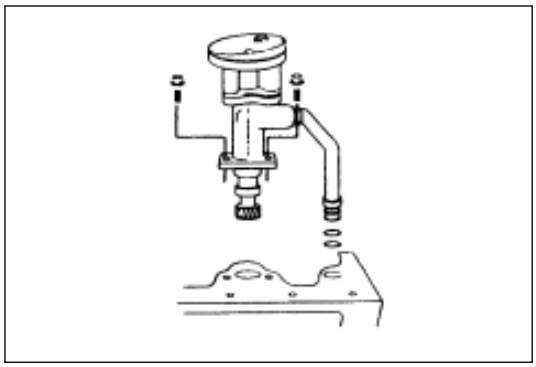

Assembly

1. Engine oil pump assembly
   (a) Oil the O-ring of oil hose and install the O-ring to the O-ring groove of the housing
   (b) Install the engine oil pump assembly with engine oil hose to the housing,and tight the fixing bolts to the specified torque
   screw down torque :19N • m
   (c) Tight sleeve nut to the specified torque
   screw down torque:25N • m

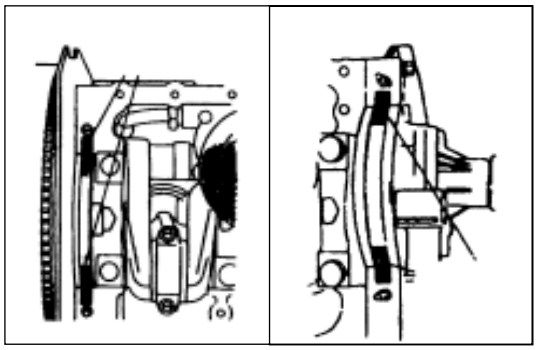

2. Oil pan assembly
   (a) Cover the fifth bearing cap arched area ,gutter and timing gear housing arched area with fluid sealant recommended or its equivalent

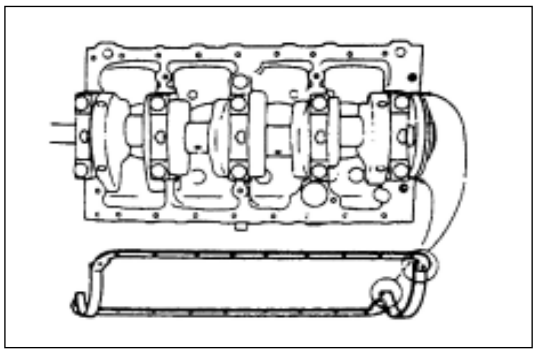

   (b) Install the posterior lip of the sealing washer into the fifth gutter
   (c) Make sure the lip is appressed to the gutter
   (d) Install the oil pan to the housing
   (e) Screw the oil pan fixing bolts to the specified torque
   screw down torque:19N • m

3. Stiffening plate and rubber packing
   (a) Assemble the rubber packing
   (b) Install the stiffening plate and tight the fixing bolts to the specified torque Screw down torque of the bolts at the side of theengine:37N • m
   Screw down torque of the bolts at the side of theclutch housing:78N • m
   (c) Mount exhaust manifold bracket
4. Enginge bracket bolt
   (a) Install the engine bracket ,and screw the bracket bolts to the specified torque
   Screw down torque :40N • m
   (b) Connect the engine oil hose to the oil pan and housing
5. Vacuum pump engine oil hose
   (a) Connect the grounding cable of the storage battery
   (b) Add coolant
   (c) Add engine oil
   (d) Start the engine and check whether there is leakage of the coolant

Oil pan assembly

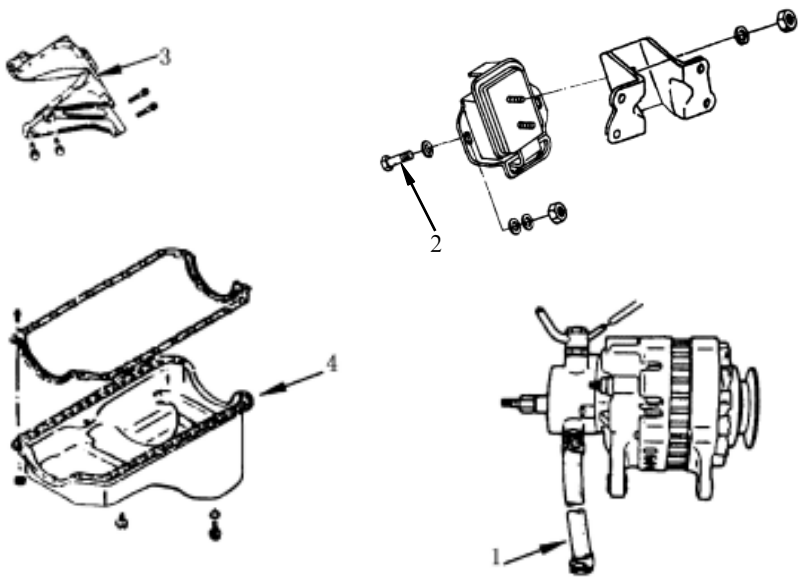

Disassembly sequence

1. vacuum pump engine oil hose
2. enginge bracket bolt
3. stiffening plate and rubber packing
4. oil pan assembly

Assembly sequence

Carry out assembly in the reverse order of disassembly

Disassembly

Preparation work

- Break the grounding cable of the storage battery
- Lift the car
- Drain off engine oil

Note:

Install a new washer of oil drain plug

oil drain plug screw down torque:83N・m

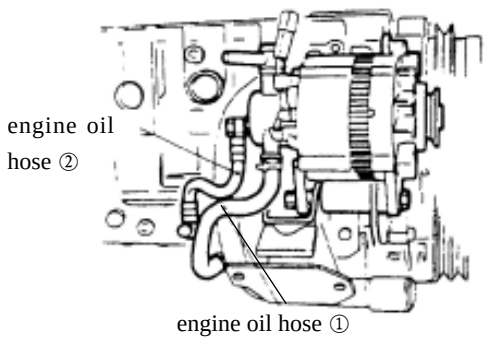

1. Vacuum pump engine oil hose
   (a) Disassemble the engine oil hose ① from the oil pan
   (b) Disassemble the engine oil hose ② from the housing

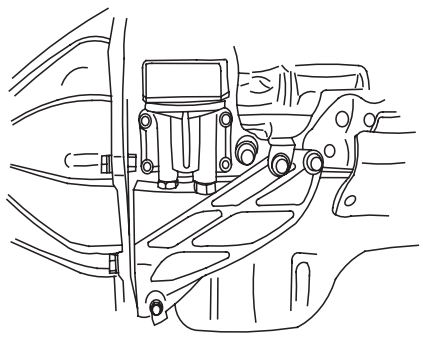

2. Enginge bracket bolt
   Release engine bracket bolts ,and remove engine bracket

3. Stiffening plate and rubber packing
   (a) Disassemble exhaust manifold bracket
   (b) Disassemble the stiffenning plate from the oil pan
   (c) Take out the rubber packing

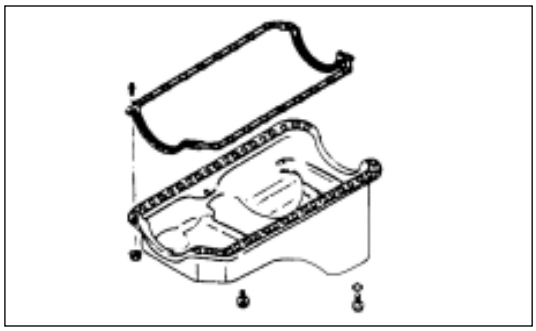

4. Oil pan assembly
   (a) Lift the engine for about 50 mm
   (b) Disassemble the oil pan from the housing

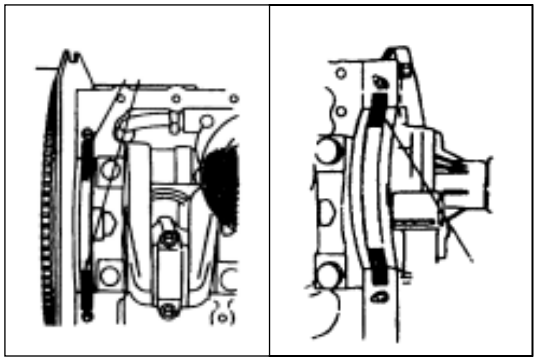

Assembly

1. Oil pan assembly
   (a) Cover the fifth bearing cap arched area ,gutter and timing gear housing arched area with recommended fluid sealant or its equivalent

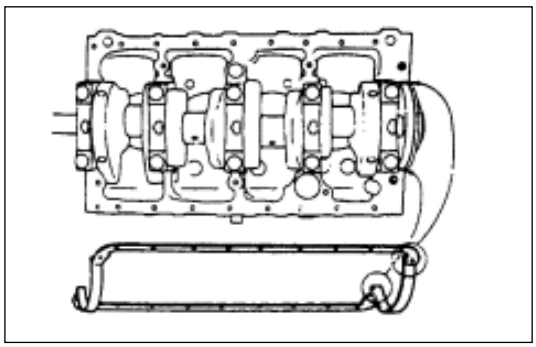

   (b) Install the posterior lip of the sealing washer into the fifth gutter
   (c) Make sure the lip is appressed to the gutter
   (d) Install the oil pan to the housing
   (e) Screw the fixing bolts of the oil pan to the specified torque
   screw down torque :19N • m

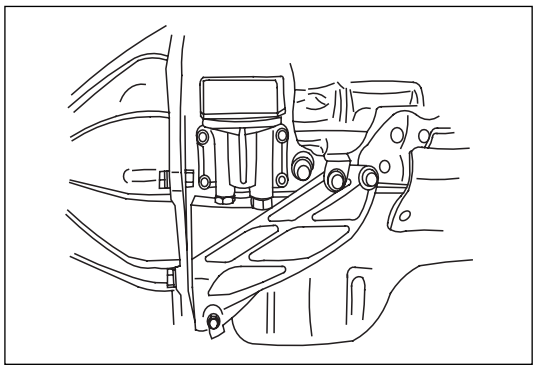

2. Stiffening plate and rubber packing
   (a) Take out the rubber packing
   (b) Install the stiffening plate and tight the fixing bolts to the specified torque
   Screw down torque of the bolts at the side of the engine:37N • m
   Screw down torque of the bolts at the side of the clutch housing:78N • m
3. Enginge bracket bolt
   (a) Iinstall the engine bracket ,and screw the bracket bolts to thespecified torque
   screw down torque :40N • m
   (b) Connect the engine oil hoses to the oil pan and housing
4. Vacuum pump engine oil hose
   (a) Connect the grounding cable of the storage battery
   (b) Add engine oil
   (c) Add coolant
   (d) Start the engine and check whether there is leakage of the coolant

Camshaft and tappet stem

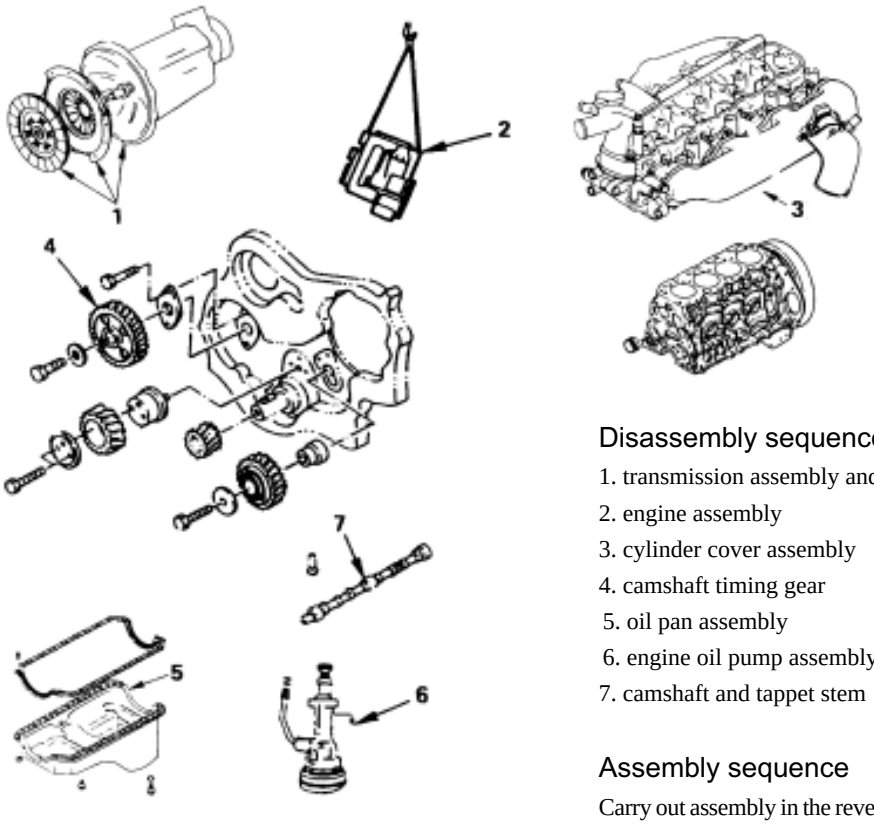

Disassembly sequence

1. transmission assembly and clutch assembly
2. engine assembly
3. cylinder cover assembly
4. camshaft timing gear
5. oil pan assembly
6. engine oil pump assembly
7. camshaft and tappet stem

Assembly sequence

Carry out assembly in the reverse order of disassembly

Disassembly

Preparation work

- Break the grounding cable of the storage battery
- Drain off coolant
- Drain off engine oil

Note:

Install a new copper washer of oil drain plug

oil drain plug screw down torque:83N.m

1. Transmission assembly and clutch assembly
   (see page EN-30)
2. Engine assembly
   (see page EN-33)
3. Cylinder cover assembly
   (see page EN-18)
4. Camshaft timing gear
   (1) Cooling fan assembly
   Release the lock nuts ,and disassemble cooling fan assembly and water pump pulley
   (2) Crankshaft vibration damper pulley
   (3) Acoustic hood
   (4) Acoustic hood gasket
   (5) Timing gear cover

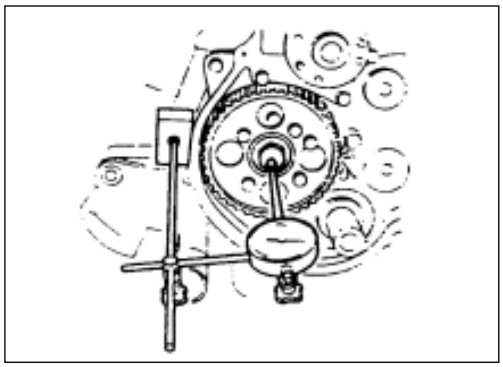

(6) Camshaft timing gear

(a) Measure the camshaft axial clearance with a dial measuring gauge Do this work before disassembling camshaft timing gear If the camshaft clearance exceeds the specified limit, the thrust plate must be replaced.

camshaft axial clearance mm

Standard	limitation
0.050-0.114	0.20

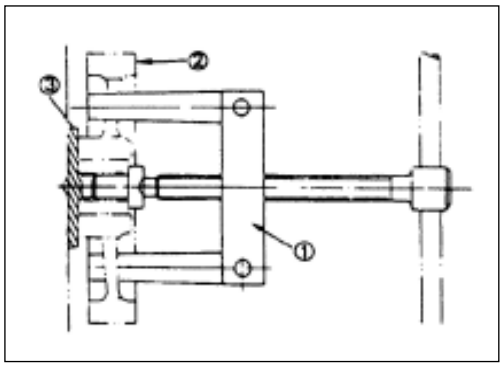

(b) Remove camshaft timing gear bolts from the camshaft.

Note:

Keep the camshaft fixed from spinning

(c) Pull the camshaft timing gear② out with general utility puller ①

general utility puller: 5-8521-0002-0

(d) Disassemble the thrust plate3)

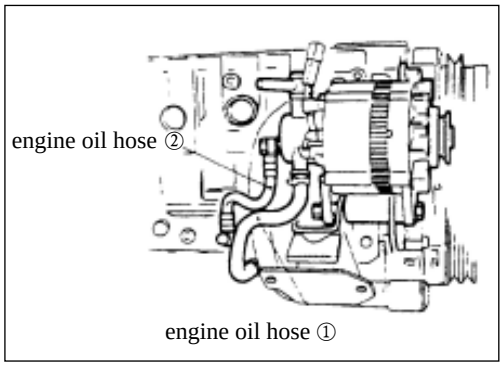

5.

(b) Disassemble the stiffening plate and rubber packing from two sides of the oil pan

(c) Disassemble the oil pan bolts and remove the oil pan from the housing

6. Engine oil pump assembly

Remove the engine oil pump assembly from the housing

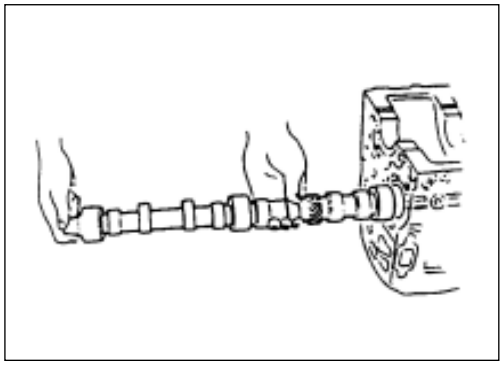

7. Camshaft and tappet stem

(a) Remove the camshaft from the housing

Take care not to damage the camshaft bearings

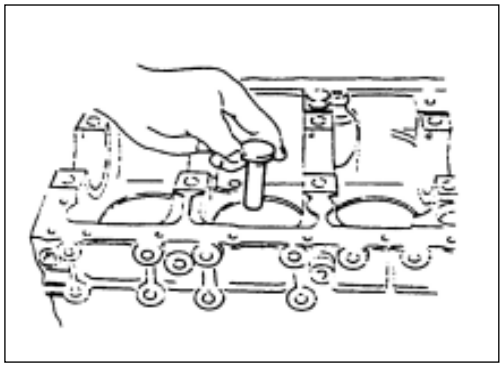

(b) Take out the tappet stem from the housing tappet stem hole

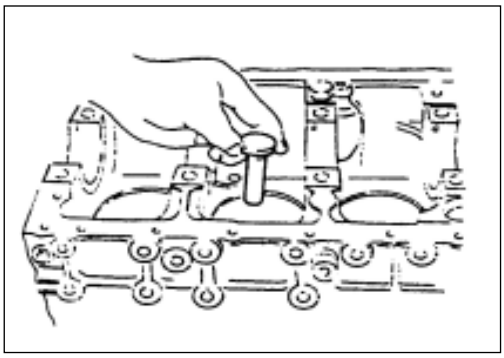

Assembly

1. Camshaft and tappet stem
   (a) Oil the tappet stem and tappet stem mounting hole
   (b) Place the tappet stem according to the position mark made when disassembling(if the tappet stem is ready to use again)

   Note:

   The tappet stem must be mounted before assembling the camshaft

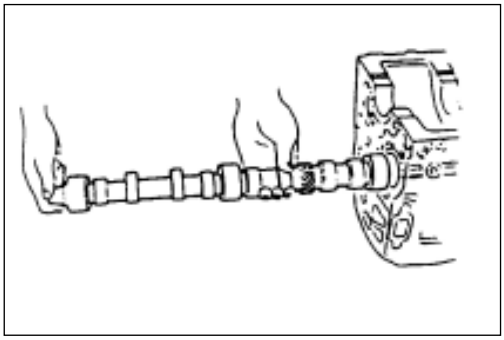

   (c) Oil the camshaft and camshaft bearings
   (d) Install the camshaft to the housing

   Take care not to damage the camshaft bearings

2. Engine oil pump assembly
   (see page EN-33)
3. Oil pan assembly
   (see page EN-33)

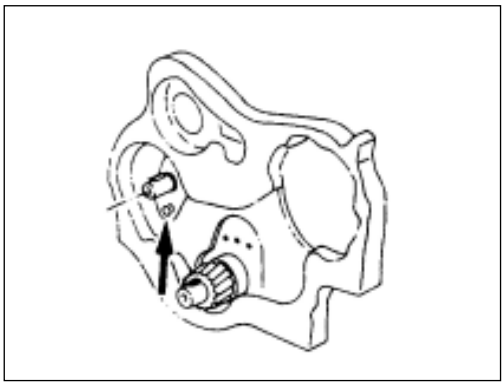

4. Camshaft timing gear
   (1) Camshaft timing gear
   (a) Install the thrust plate to the cylinder and screw the fixing bolts to the specified torque

   screw down torque :18N • m
   (b) Install the camshaft timing gear to the camshaft

   The mark "Y-Y" of the camshaft must be outward
   (c) Align the mark "V-V" of the idle gear "B" with the mark "V" of the injection pump timing gear
   (d) Align the mark "Z" of the idle gear "B" with the mark "Z-Z" of the idle gear "A"
   (e) Place the position marks "X" and "Y" of idle gear "A" to direct them toward the frontage of the engine
   (f) Align the mark "X" of the idle gear "A" with the mark "X-X" of the crankshaft timing gear
   (g) Align the mark "Y" of the idle gear "A" with the mark "Y-Y" of the camshaft timing gear
   (h) Tight the camshaft timing gear fixing bolts to the specified torque

   screw down torque :85N • m

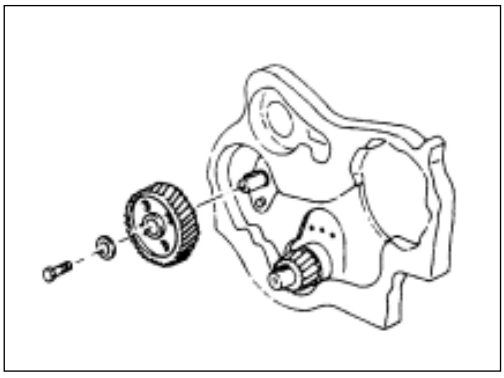

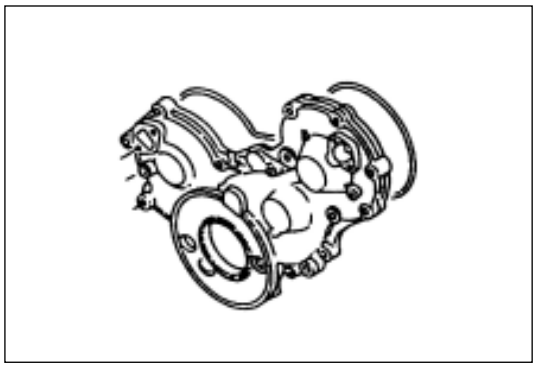

(2) Timing gear cover

(a) Align the timing gear cover set pin with the timing gear cover,and then assemble the timing gear cover

(b) Screw the fixing bolts of the timing gear cover to the specified torque

Screw down torque: 19N・m

(3) Acoustic hood gasket

(4) Acoustic hood

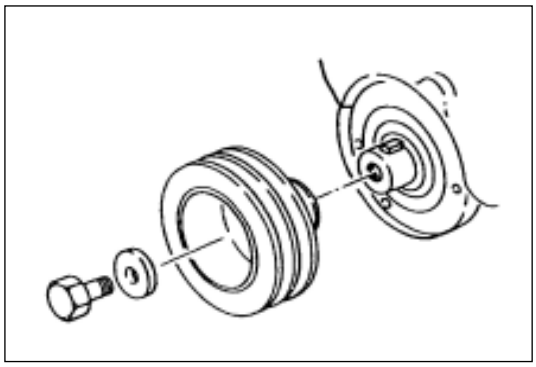

(5) Crankshaft vibration damper pulley

Tight the crankshaft vibration damper pulley fixing bolts to the specified torque

Screw down torque: 206N・m

Note:

Fix the flywheel ring gear to prevent the crankshaft from spinning when tighting the crankshaft vibration damper pulley bolts

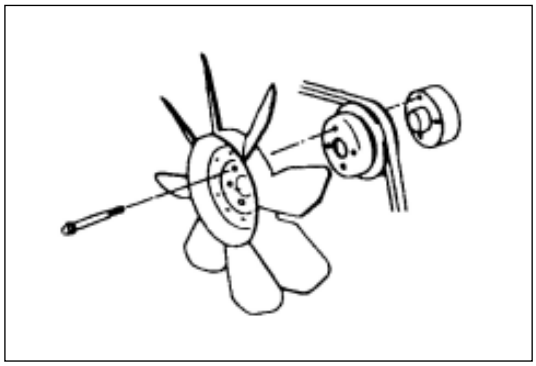

(6) Cooling fan assembly

Install the water pump pulley and cooling fan assemlby to the water pump in turn, and tight the lock nuts to the specified torque

Screw down torque: 8N・m

5. Cylinder cover assembly
（see page EN-20）
6. Engine assembly
（see page EN-3）
7. Transmission assembly and clutch assembly
（see page EN-30）

Piston and connecting rod assembly

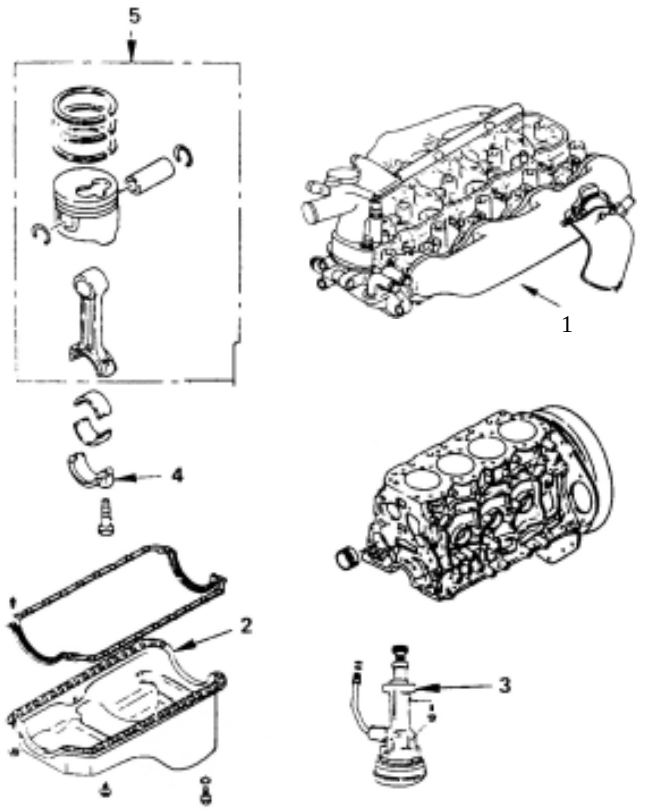

Disassembly sequence

1. cylinder cover assembly
2. oil pan assembly
3. engine oil pump assembly
4. connecting rod bearing cap
5. piston and connecting rod assembly

Assembly sequence

Carry out assembly in the reverse order of disassembly

Disassembly

Preparation work

- Break the grounding cable of the storage battery
- Drain off coolant
- Drain off engine oil

Note:

Install a new copper washer of oil drain plug

screw down torque: 83N • m

1. Cylinder cover assembly
   (see page EN-18)
2. Oil pan assembly
   (see page EN-34)
3. Engine oil pump assembly
   (see page EN-32)
4. Connecting rod bearing cap
   If the lower bearing of the connecting rod is to be reinstalled, please tag each bearing with a label,recording the cylinder serial number when disassembling and mounting position

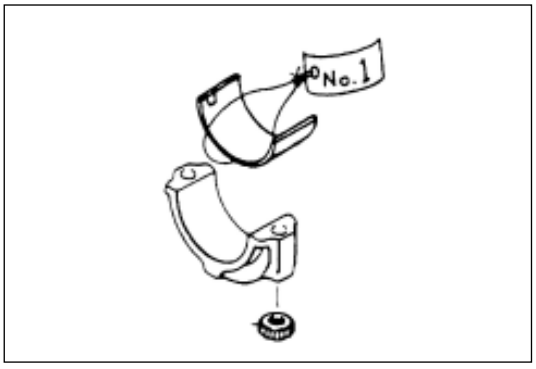

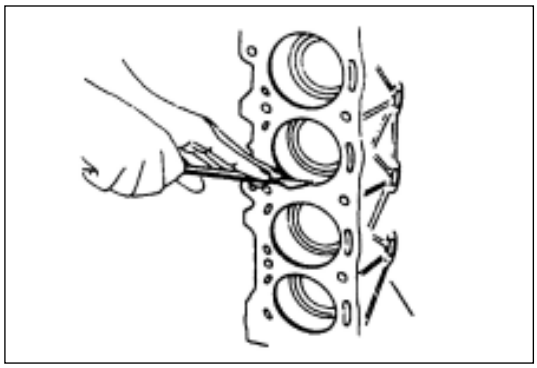

5. Piston and connecting rod assembly

(a) Clean the carbon of the upper part of the cylinder wall with a doctor knife before disassembling the piston and connecting rod

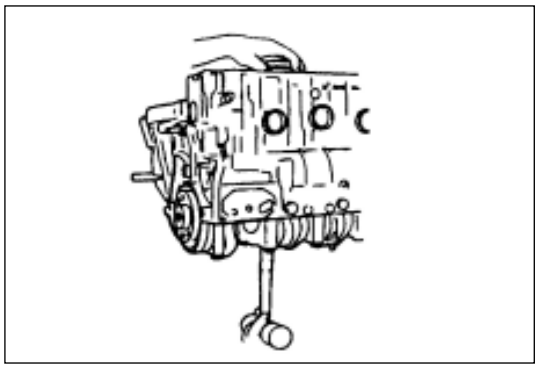

(b) Move the piston to the top of the cylinder, push the end of the rod with the shaft of a hammer or its equivalent,and take out the piston and connecting rod.

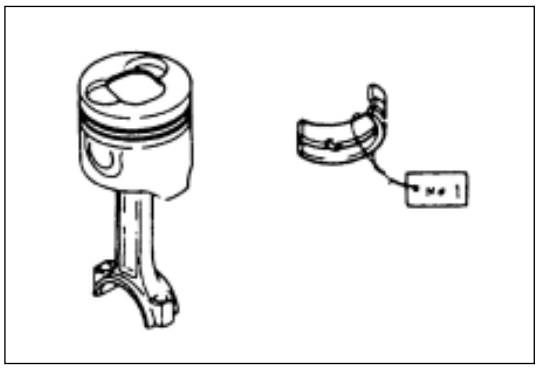

(c) If the connecting rod upper bearing is to be reinstalled, please tag each bearing with a label, recording the cylinder serial number when disassembling and mounting position

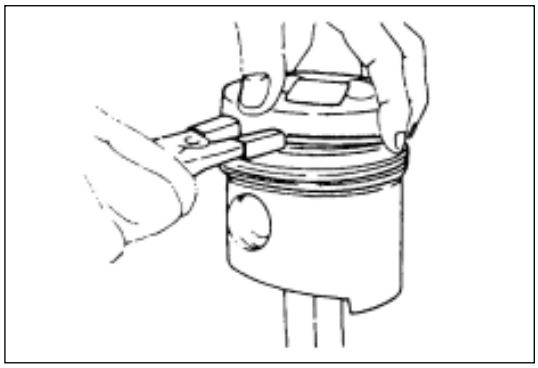

(d) Clamp the rod with a jaw
Take care not to bruise the connecting rod

(e) Detach each piston ring with a piston ring expander
Do not try to detach piston ring with other tools
Expanding the piston ring with extravagance will reduce the elasticity of the piston ring

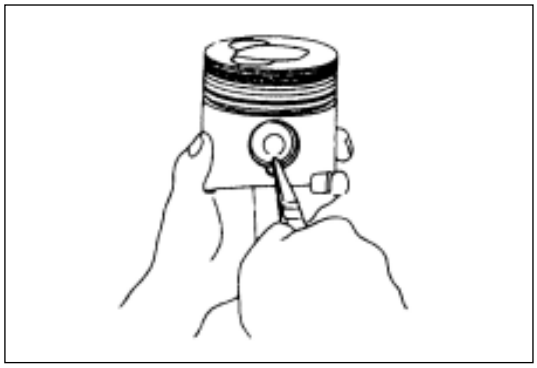

(f) Detach piston pin retainer with a long-nose plier

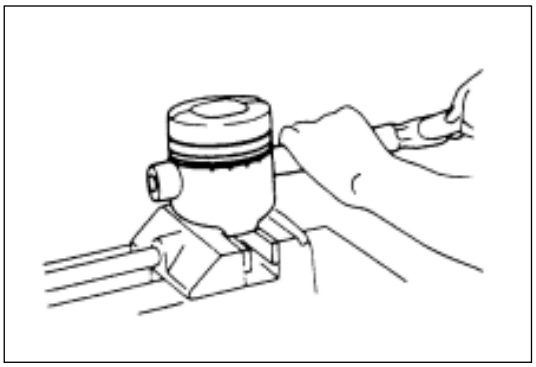

(g) Knock out the piston pin with hammer and copper bar
If the piston and piston pin are to be reinstalled,please tag each bearing and piston pin with a label, recording the cylinder serial number when disassembling and mounting position

Assembly

1. Piston and connecting rod assembly

(a) Weigh each piston and connecting rod assembly
When selecting piston and connecting rod set,the weight differentials of different cylinders while same sets should be maintained in a specified range
Specified value:less than 3g

(b) Clamp the rod with a jaw
Take care not to bruise the connecting rod

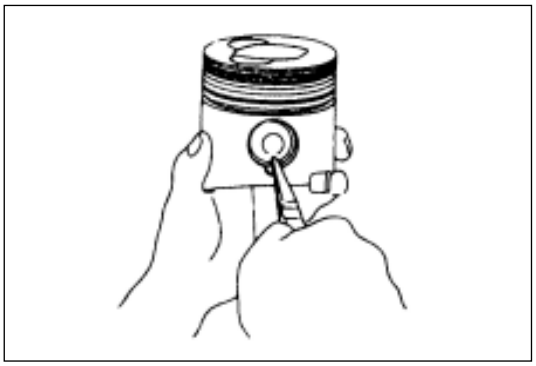

(c) Install the piston pin retainer into the groove with a long-nose plier

Note:
When changing the set of the piston/connecting rod,do not change the set of the piston/piston pin.

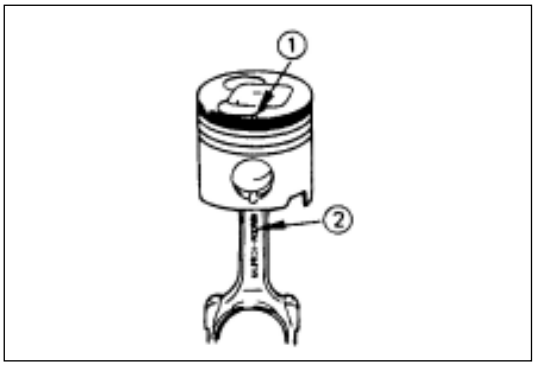

(d) Install the piston to the connecting rod
The forward mark ① at the top of the piston and the cast mark "ISUZU" ② must be directed toward the same direction

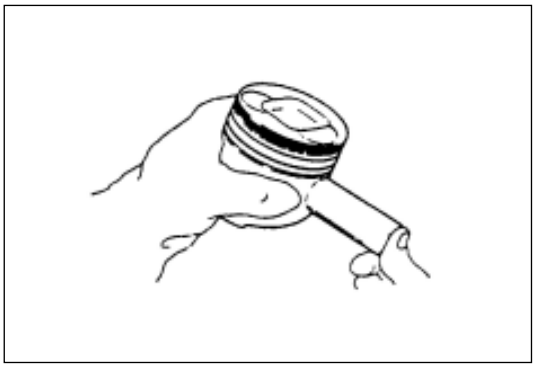

(e) Oil the piston pin and piston pin hole
Push the piston pin into the piston pin hole with fingers till it contacts the piston pin retainer

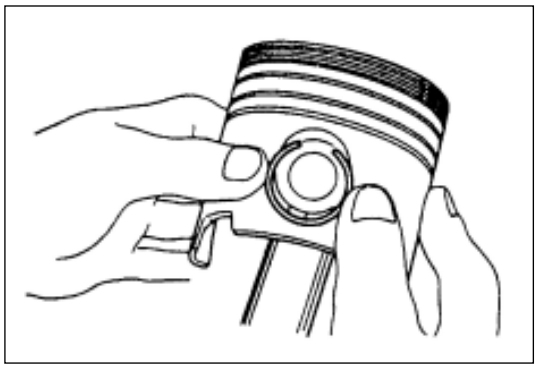

(f) Press the retainer hard into the groove with fingers. Check whether the connecting rod spins freely on the pin

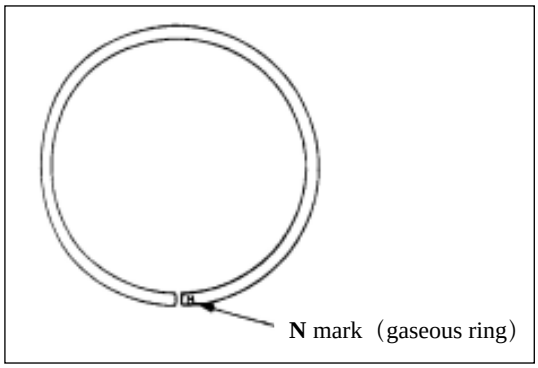

(g) Mount the piston ring with a piston ring expander The N shaped mark on the gaseous ring must be upward. The identification sign is shown in figure

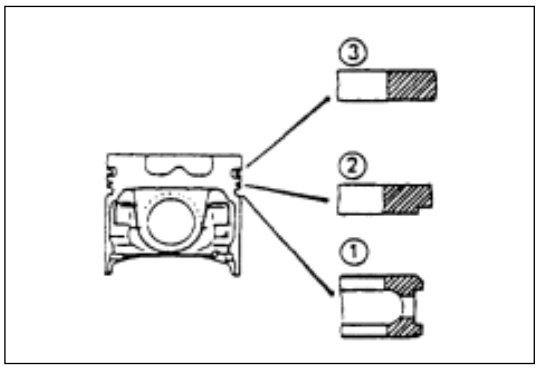

(h) Install the piston ring in the following order
① Oil ring
The oil ring with spiral expanding ring
② The second gaseous ring
③ The first gaseous ring
The N shaped mark of the gaseous ring should be upward when mounting the gaseous ring.

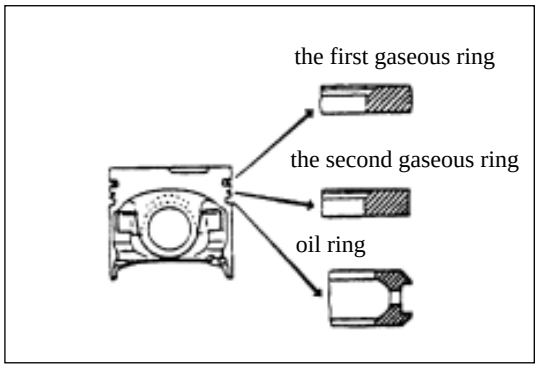

Note:
The surface with the mark should be upward when assembling the gaseous ring
Install the spiral expanding ring into the oil ring groove, and make sure there is no clearance at any side of the spiral expanding ring before assembling the oil ring

(i) Cover the the piston surface with oil
(j) Check whether the piston ring spins freely in its groove

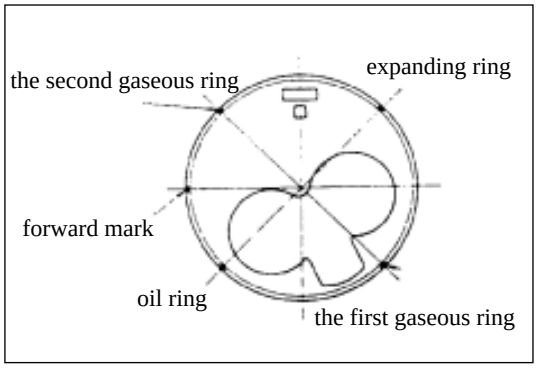

(k) Place the piston ring joint shown in figure

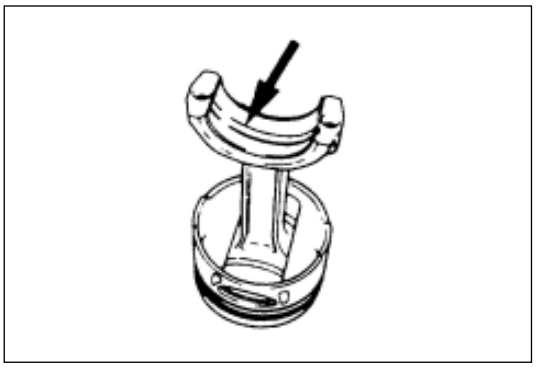

(1) Eliminate carefully all kinds of sundries on the back of rod bearings and fitting surface of the rod bearings

(m) Cover the upper bearing surface with engine oil
Cover the cylinder wall with engine oil

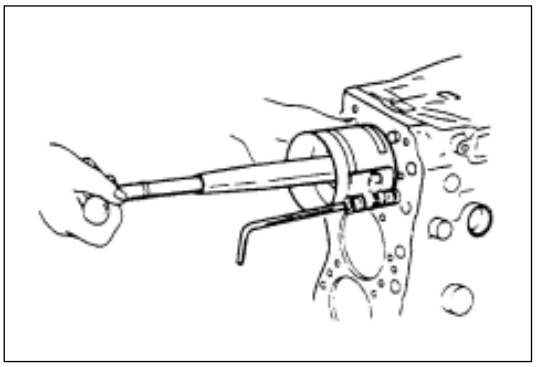

(n) When installing the piston, the forward mark at the top should be directed toward the frontage of the engine
Compress the piston ring with a piston ring compressor
piston ring compressor:5-8840-99018-0（J-8037）

(o) Push the piston into the cylinder with hammerís shaft,till the connecting rod contacts the crankpin.
At the same time rotate the crankshaft till the crankpin locates at the bottom dead center(BDC)

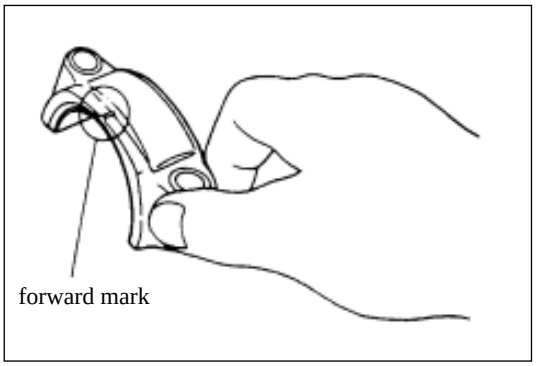

2. Connecting rod bearing cap

(a) When assembling, the forward mark on the bearing cap should be directed toward the frontage of the engine

(b) Install the connecting bearing cap
Align the cylinder serial number mark on the rod bearing cap with the cylinder serial number mark on the connceting rod

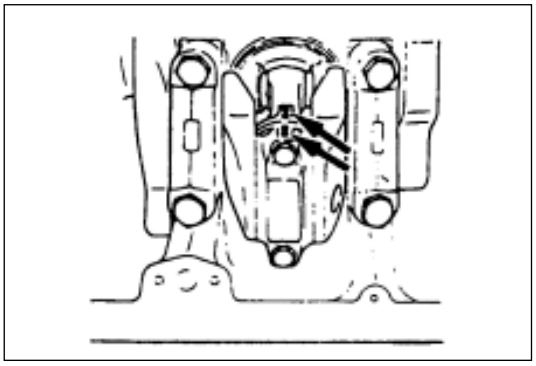

(a) Cover the screws of the rod bearing cap bolts and the fitting surfaces with engine oil

(b) Tight the rod bearing cap bolts to the specified torque with angle-tight method in two steps,

Rod bearing cap nut torque N · m

the first step(pre-tighten torque)	the second step(final torque)
45	60-90°

Note:
Rotate the crankshaft manually and check whether the crankshaft spins freely

3. Engine oil pump assembly
(see page EN-33)

4. Oil pan assembly
（see page EN-33）

5. Cylinder cover assembly
(see page EN-20)

Crankshaft front-seal

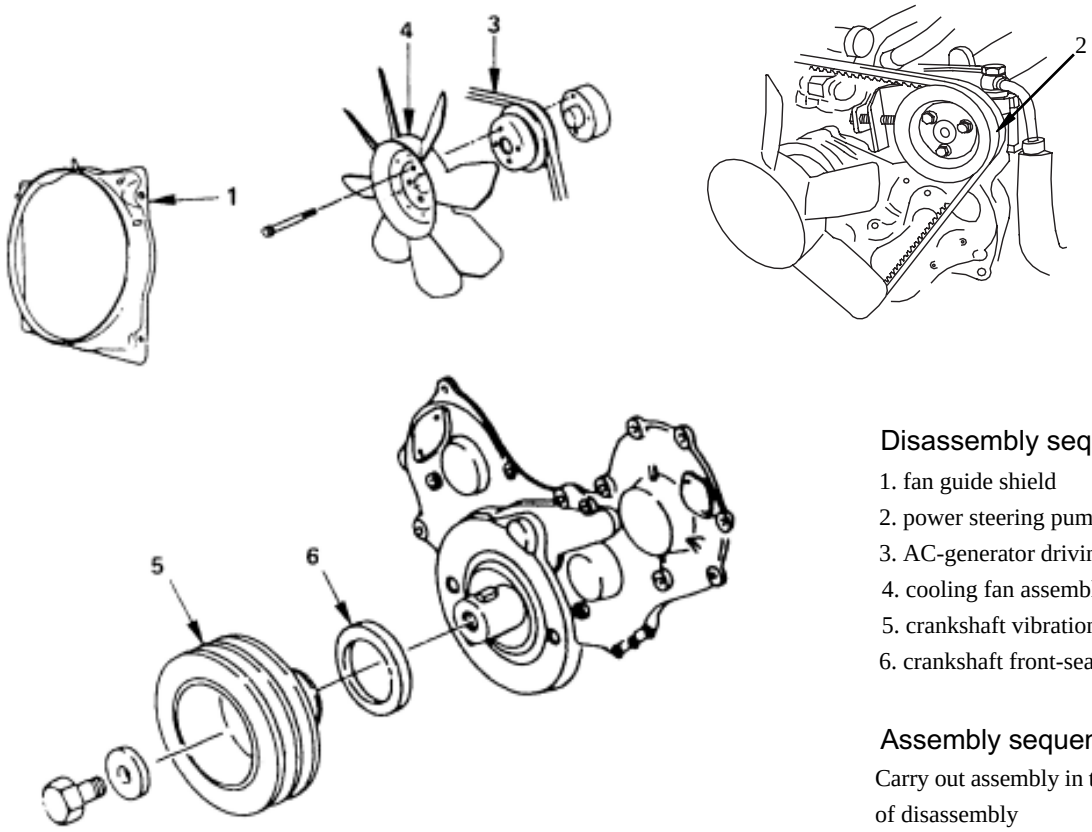

Disassembly sequence

1. fan guide shield
2. power steering pump driving belt
3. AC-generator driving belt
4. cooling fan assembly
5. crankshaft vibration damper pulley
6. crankshaft front-seal

Assembly sequence

Carry out assembly in the reverse order of disassembly

Disassembly

Preparation work

- Break the grounding cable of the storage battery
- Drain off coolant

1. Fan guide shield
2. Power steering pump driving belt

   Unscrew the bracket bolts and adjusting bolts of the power steering pump and then disassemble the driving belts
3. AC-generator driving belt

   Release the bracket bolt (the lower side) of the AC-generator and lock bolts of the adjustment plate and detach the driving belts
4. Cooling fan assembly

   Release lock nuts of the cooling fan,and detach the cooling fan assembly and the water pump pulley
5. Crankshaft vibration damper pulley
6. Crankshaft front-seal

   Knock the the oil seal around with plastic hammer and stocky driver, and disassemble the front-seal from the gear cover. Take care not to damage the front-seal fitting surface

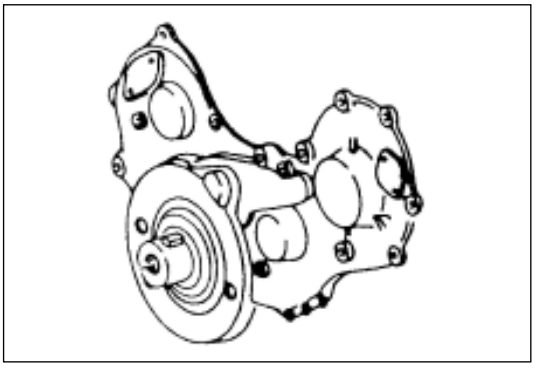

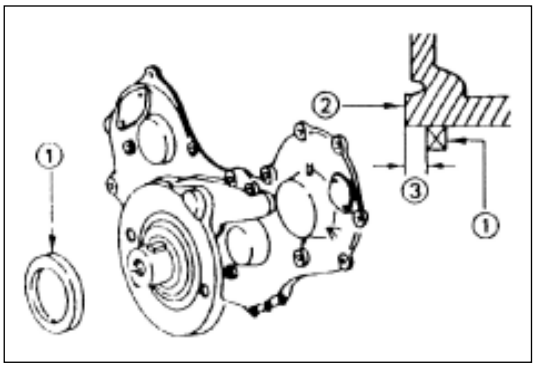

Assembly

1. Crankshaft front-seal
   (a) Install the front-seal① to the gear cover with an oil seal assembler ②
   Front-seal assembler:5-8840-2361-0
   (b) Pay attention to the mounting depth ③ of the oil seal in figure
   Depth value:1mm

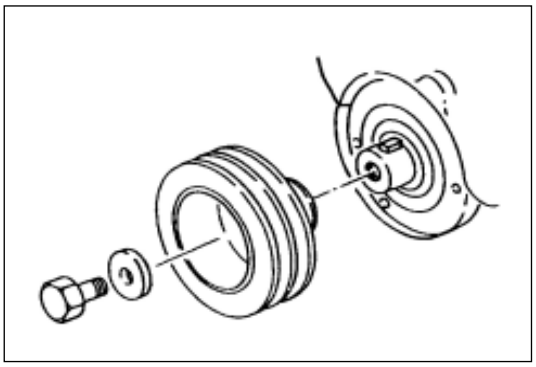

2. Crankshaft vibration damper pulley
   Tight the crankshaft vibration damper pulley fixing bolts to the specified torque
   Screw down torque :206N・m
   Note:
   Fix the flywheel ring gear to prevent the crankshaft from spinning when tighting the crankshaft vibration damper pulley bolts

3. Cooling fan assembly
   Install the water pump pulley and the cooling fan to the water pump, and tight the lock nuts to the specified torque
   Screw down torque :8N・m
4. AC-generator driving belt
   Mount AC-generator driving belts and adjust belt tightening
   （See page EN-27）
5. Power steering pump driving belt
   Mount power steering pump driving belts and adjust belt tightening
   （See page EN-27）
6. Fan guide shield
   (a) Install the fan guide shield and overflow tank hose.
   (b) Connect the grounding cable of the storage battery
   (c) Add coolant
   (d) Start the engine and check whether there is leakage of the coolant

Crankshaft rear-seal

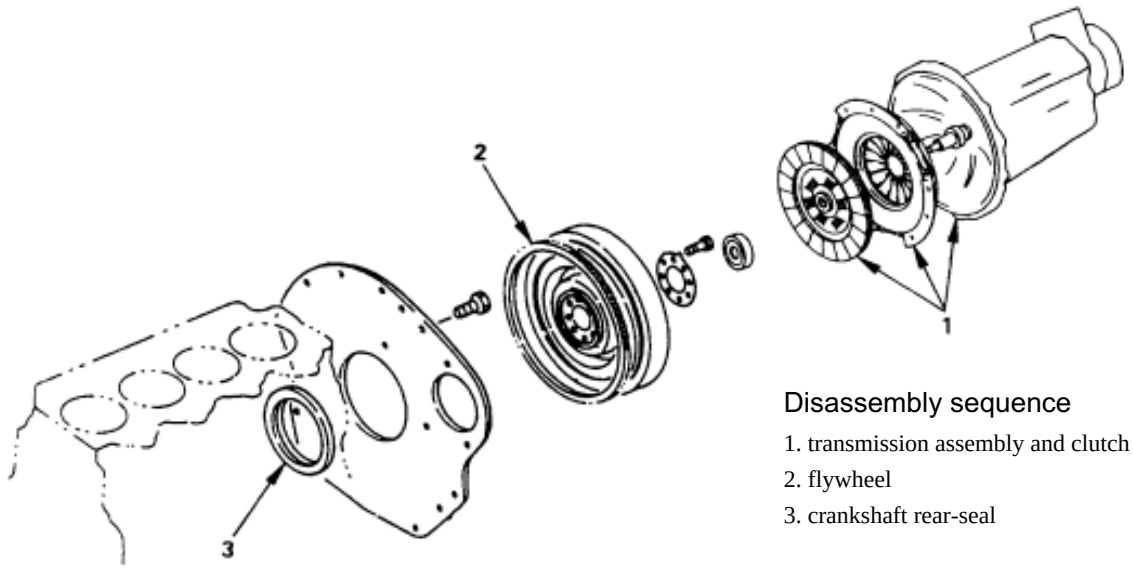

Disassembly sequence

1. transmission assembly and clutch assembly
2. flywheel
3. crankshaft rear-seal

Assembly sequence

Carry out assembly in the reverse order of disassembly

Disassembly

Preparation work

- Break the grounding cable of the storage battery

1. Transmission assembly and clutch assembly
   (See page EN-30)

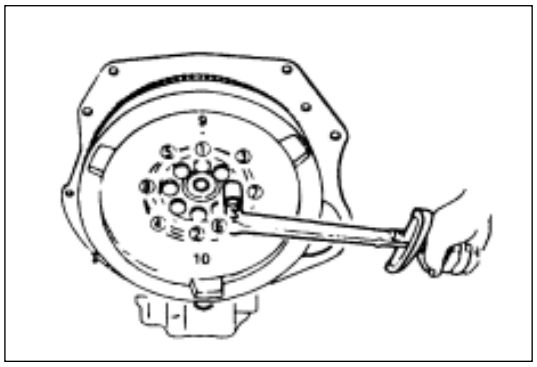

2. Flywheel
   (a) Install flywheel retaining device
   (b) Release flywheel fixing bolts and then disassemble the flywheel

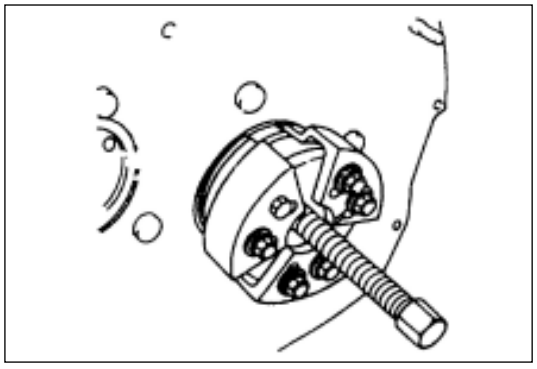

3. Crankshaft rear-seal
   Push the oil seal inward and at the same time assemble the special tool shown in the figure to detach the oil seal rear-seal detacher :5-8840-2360-0
   Note:
   Take care not to damage the crankshaft and rear-seal base when disassembling oil seal

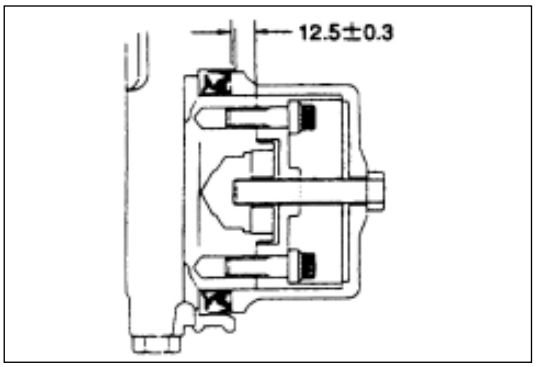

Assembly

1.Crankshaft rear-seal

(a) Install the rear-seal to the block with an oil seal assembler rear-seal assembler:5-8840-2359-0

Note:

Scrape the rust and chippings of the oil seal press-in part thoroughly.

Pay attention to the press-in direction of the oil seal

(b) Install the joint of the special tool to the posterior end of the crankshaft with two bolts

(c) Install the oil seal to the outside circle of the joint (d) Insert the sleeve into the joint part,and tight bolt (M12 × 1.75, L=70) till the joint butt end retains the sleeve.

(e) Disassemble the joint and sleeve

(f) Check oil seal fitted position after mounting the oil seal Standard value:(12.2-12.8)mm

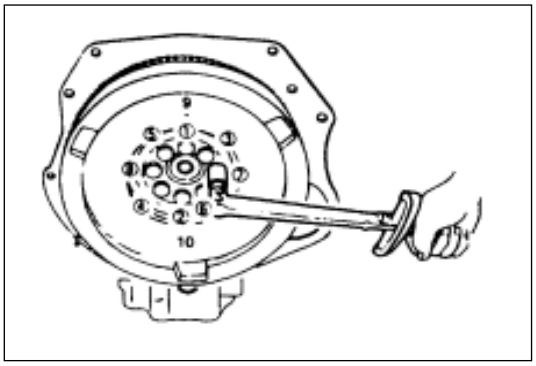

2.Flywheel

(a) Oil the flywheel bolts

(b) Tight the flywheel bolts to the specified torque with angle-tight method in two steps,and the sequence is shown in figure.

Flywheel bolt torque N • m

the first step(pre-tighten torque)	the second step(final torque)
59	60-90°

3. Transmission assembly and clutch assembly (See page EN-31)

Crankshaft and main bearing

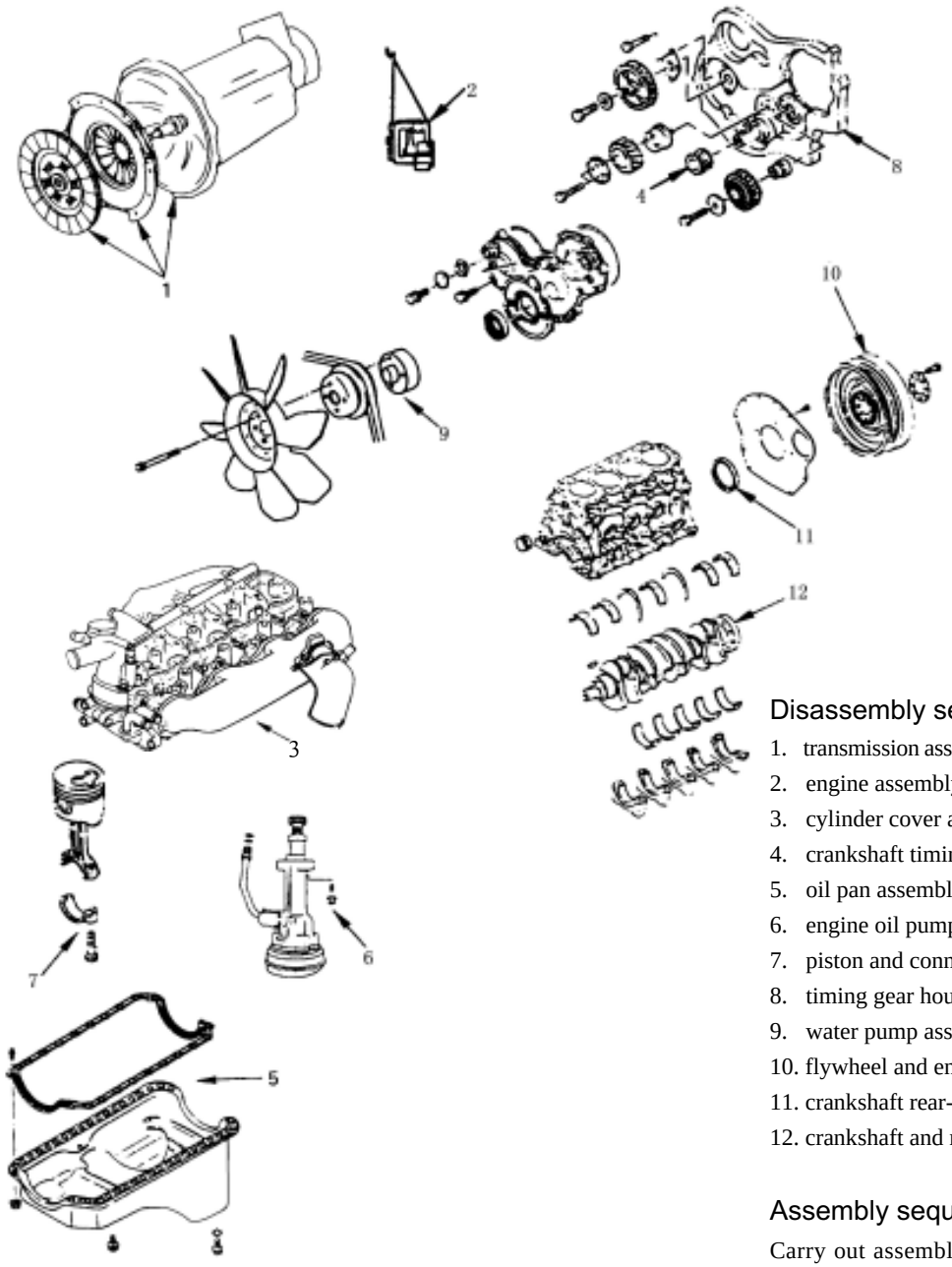

Disassembly sequence

1. transmission assembly and clutch assembly
2. engine assembly
3. cylinder cover assembly
4. crankshaft timing gear
5. oil pan assembly
6. engine oil pump assembly
7. piston and connecting rod assembly
8. timing gear housing
9. water pump assembly
10. flywheel and engine body backboard
11. crankshaft rear-seal
12. crankshaft and main bearing

Assembly sequence

Carry out assembly in the reverse order of disassembly

Disassembly

Preparation work

- Break the grounding cable of the storage battery
- Drain off coolant
- Drain off engine oil

1. Transmission assembly and clutch assembly
   (See page EN-30)
2. Engine assembly
   (See page EN-3)
3. Cylinder cover assembly
   (See page EN-18)

4. Crankshaft timing gear
   (See page EN-23)
5. Oil pan assembly
   (See page EN-34)
6. Engine oil pump assembly
   (See page EN-32)
7. Piston and connecting rod assembly
   (See page EN-41)

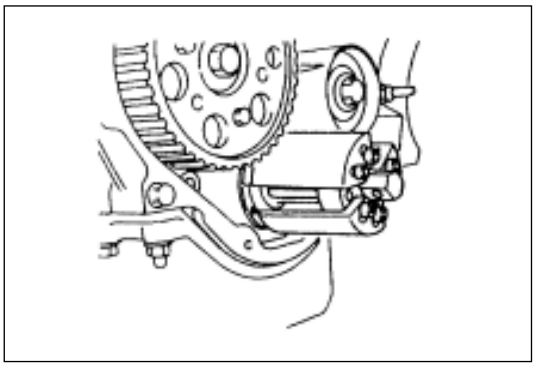

8. Timing gear housing

9. Water pump assembly
10. Flywheel and engine body backboard
    (a) Install flywheel retaining device
    (b) Release fixing bolts of the flywheel and then disassemble the flywheel
    (c) Disassemble the engine body backboard

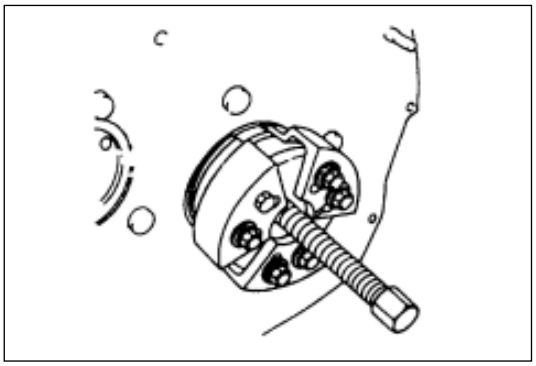

11. crankshaft rear-seal
    Push the oil seal inward and at the same time assemble a special tool shown in the figure to detach the oil seal
    rear-seal detacher: 5-8840-2360-0
    Note:
    Take care not to damage the back plate and crankshaft sealing surface when disassembling oil seal

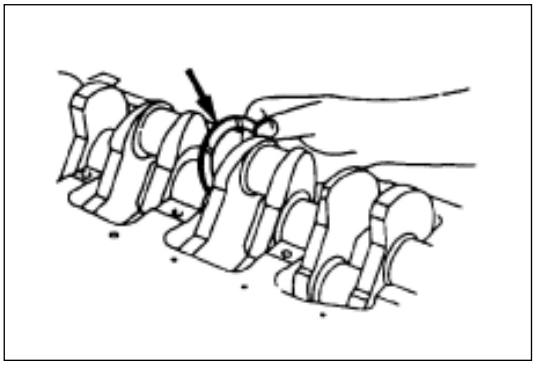

12. Crankshaft and main bearing
    (a) Disassemble main bearing cap and thrust plate
    (b) Disassemble the crankshaft carefully
    (c) Disassemble the the crankshaft upper bearing

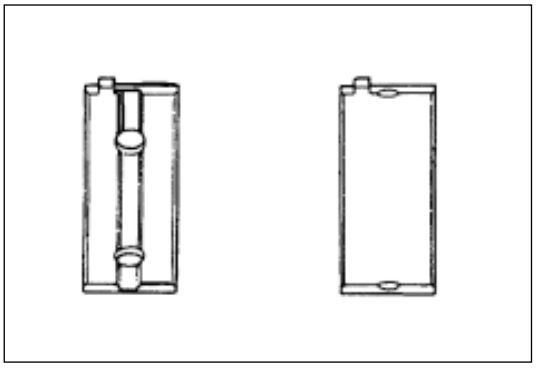

Assembly

1. Crankshaft and main bearing
   (a) There is an oil orifice and an oil groove in the upper bearing,while nothing in the lower one
   (b) Scrape off various foreign substancees on the bearings
   (c) Cover the upper and lower bearings with new engine oil
   Note:
   Do not oil the back of bearings and fitting surfaces of the bearings and the housing

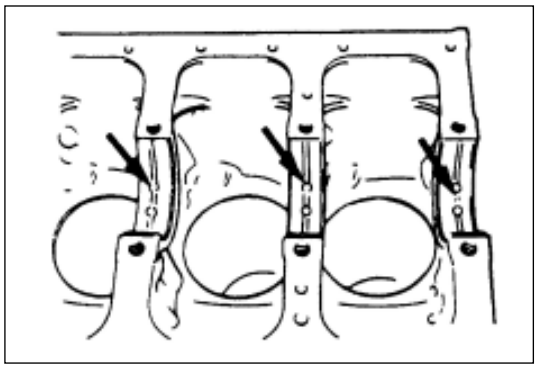

(d) Install the crankshaft main bearing to the housing and main bearing cap .
The main bearing must be installed in the right position

(e) Assemble the crankshaft carefully

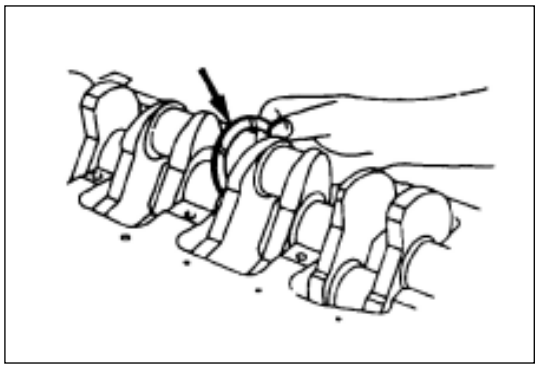

(f) Cover the thrust plate with engine oil

(g) Install the thrust plate to the third maneton
The oil groove of the thrust plate must be directed toward the crankshaft

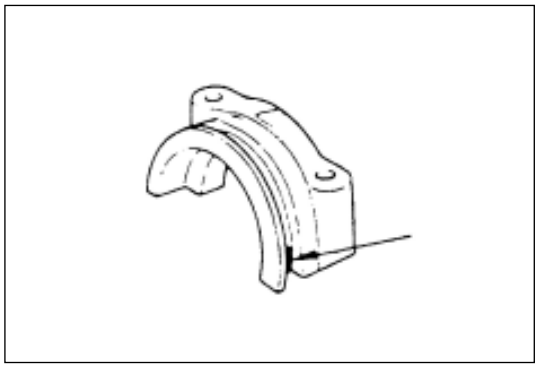

(h) Cover the fifth bearing cap of the crankshaft with recommended fluid sealant or its equivalent,shown in figure

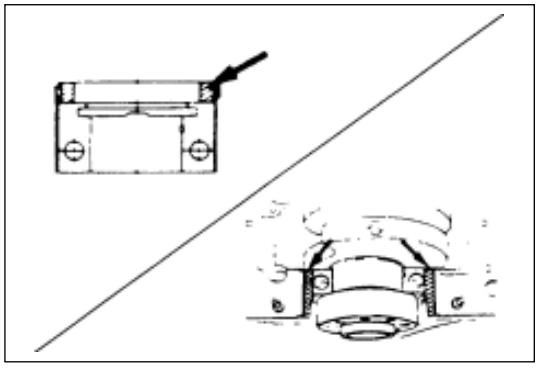

(i) Cover the fitting surfaces of fifth bearing cap and housing with recommended fluid sealant or its equivalent,shown in figure

Note:

Before smearing liquid sealant,the main bearing fitting surface must be clean from even a drop of engine oil

Do not let fluid sealant block threaded holes and bearings

(j) The arrow mark at the top of each bearing cap must be directed toward the frontage of the engine when mounting main bearing cap

(k) Oil each bolt of the crankshaft main bearing cap

(1) Tight the crankshaft main bearing cap bolts to the specified torque,a little each time,and the sequence is shown in figure
Screw down torque: 167N • m

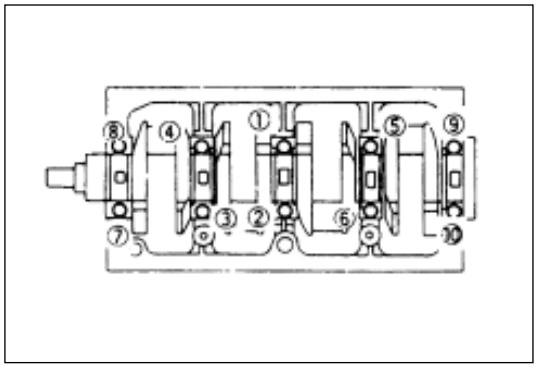

Note:

Rotate the crankshaft manually and check whether the crankshaft spins freely

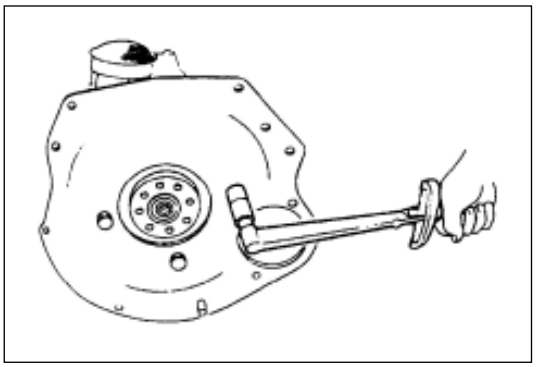

2. Crankshaft rear-seal
   (see page EN-48)
3. Flywheel and engine body backboard
   (a) Align the back plate with set pin of the housing
   (b) Screw the back plate fixing bolts to the specified torque
   screw down torque: 82N • m

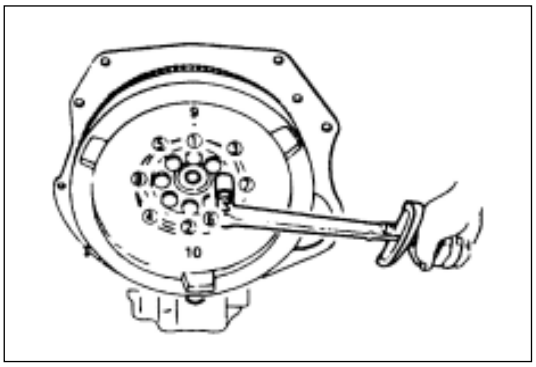

   (c) Stop off the crankshaft with hardwood to prevent the flywheel from spinning
   (d) Oil the screws of the flywheel bolts
   (e) Align the crankshaft set pin with flywheel set pin hole
   (f) Tight the flywheel bolts to the specified torque with angle-tight method in two steps
   The sequence is shown in figure.

Flywheel bolt torque N • m

the first step(pre-tighten torque)	the second step(final torque)
59	60-90˚

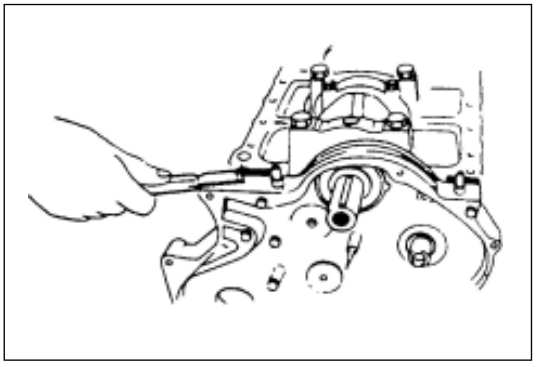

4. Water pump
   Install the water pump assembly and tight the fixing bolts to the specified torque
   screw down torque: 20N • m
5. Timing gear housing
   (a) Install the timing gear housing to the housing
   Do not distort the crankshaft front-seal
   (b) Screw the timing gear housing fixing bolts to the specified torque
   screw down torque: 19N • m
   (c) Remove the bulging of the timing gear housing sealing washer
6. Piston and connecting rod assembly
7. Engine oil pump assembly
   (see page EN-33)
8. Oil pan assembly
   (see page EN-33)
9. Crankshaft timing gear
   (see page EN-25)
10. Cylinder cover assembly
    (see page EN-20)
11. Engine assembly
    (see page EN-5)
12. Transmission assembly and clutch assembl
    (see page EN-31)

Housing

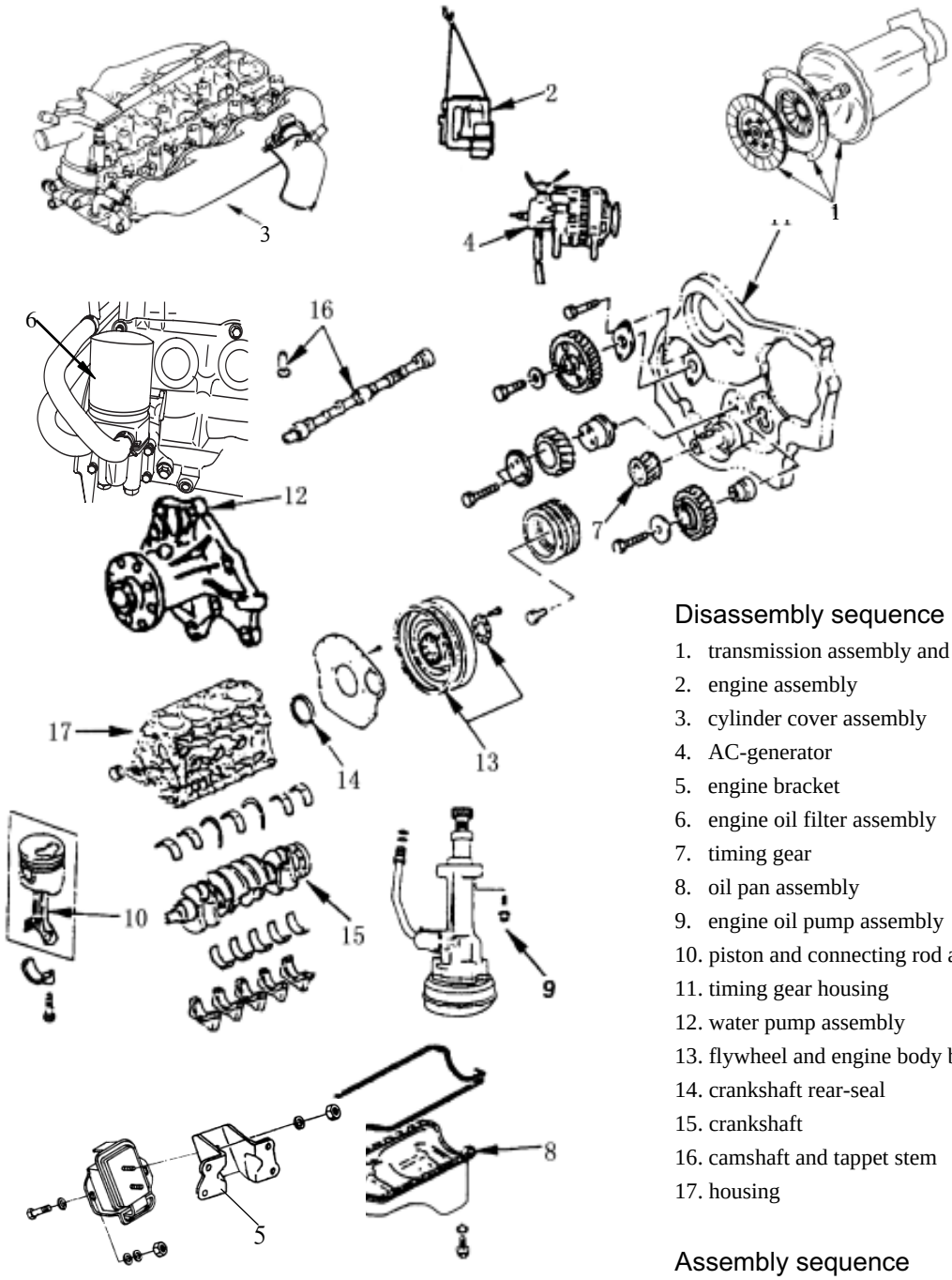

Disassembly sequence

1. transmission assembly and clutch assembly
2. engine assembly
3. cylinder cover assembly
4. AC-generator
5. engine bracket
6. engine oil filter assembly
7. timing gear
8. oil pan assembly
9. engine oil pump assembly
10. piston and connecting rod assembly
11. timing gear housing
12. water pump assembly
13. flywheel and engine body backboard
14. crankshaft rear-seal
15. crankshaft
16. camshaft and tappet stem
17. housing

Assembly sequence

Carry out assembly in the reverse order of disassembly

Disassembly

Preparation work

- Break the grounding cable of the storage battery
- Drain off coolant
- Drain off engine oil

Note:

Install a new copper washer of oil drain plug oil drain plug screw down torque: 83N • m

1. Transmission assembly and clutch assembly
   (See page EN-30)
2. Engine assembly
   (See page EN-3)
3. Cylinder cover assembly
   (See page EN-18)

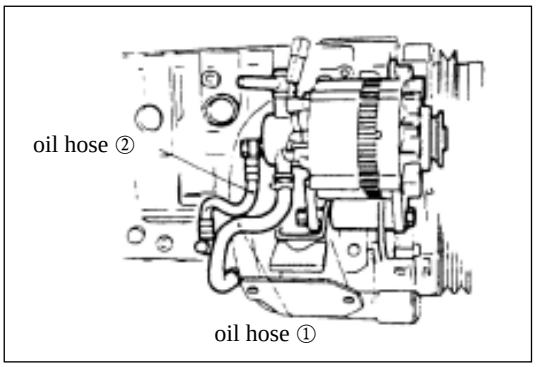

4. AC-generator
   (a)Remove AC-generator wire connector
   (b)Remove the engine oil hose ① from the oil pan
   (c)Remove the engine oil hose ② from the housing
   (d)Remove AC-generator adjustment plate fixing bolts
   (e)Remove AC-generator fixing bolts

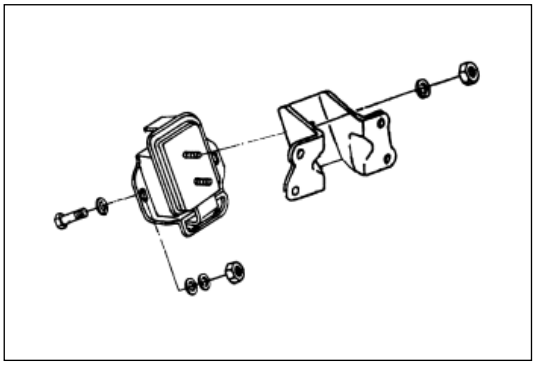

5. Engine bracket
   Remove the engine bracket from the housing

6. Engine oil filter assembly
   (see page EN-28)
7. Timing gear
   (see page EN-23)
8. Oil pan assembly
   (see page EN-34)
9. Engine oil pump assembly
   (see page EN-32)
10. Piston and connecting rod assembly
    (see page EN-41)
11. Timing gear housing
    Release timing gear housing fixing bolts , and detach timing gear housing and its sealing washer from the housing

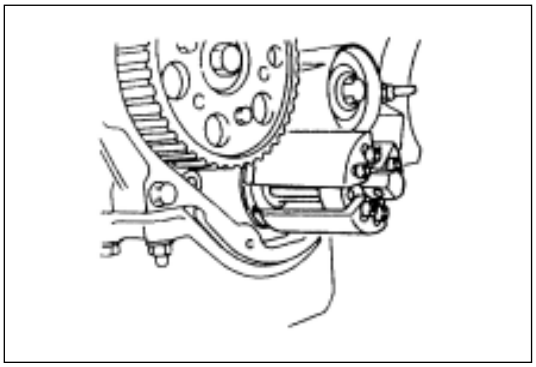

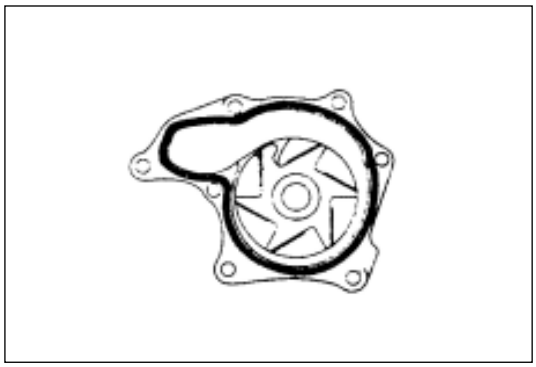

12. Water pump assembly
    (a) Remove the water pump assembly fixing bolts and detach the water pump assembly
    (b) Detach the O-ring from the water pump

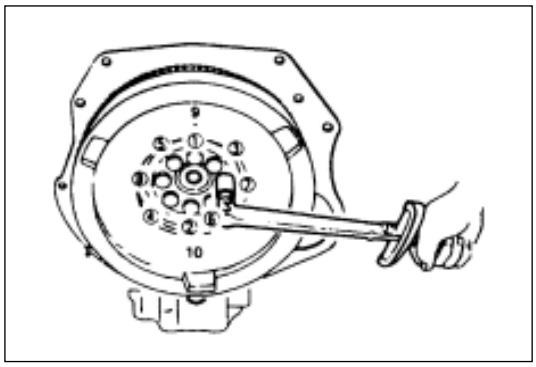

13. Flywheel and engine body backboard
    (a) Install flywheel retaining device
    (b) Release the flywheel fixing bolts and then disassemble the flywheel
    (c) Disassemble the engine body backboard

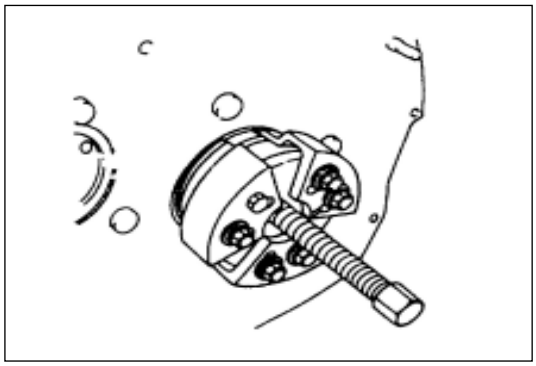

14. Crankshaft rear-seal
    Push the oil seal inward and at the same time assemble a special tool shown in figure to detach the oil seal
    rear-seal detacher: 5-8840-2360-0
    Note:
    Take care not to damage the back plate and crankshaft sealing surface when disassembling oil seal

15. Crankshaft
16. Camshaft and tappet stem
    （See page EN-37）
17. Housing

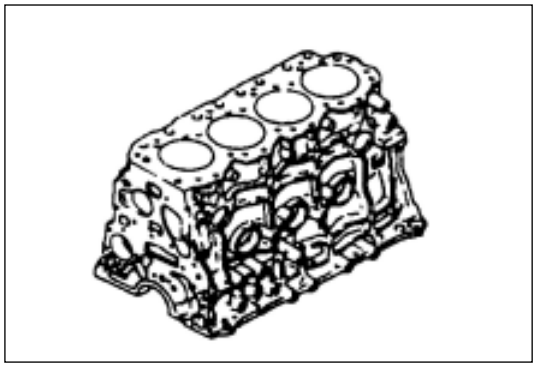

Assembly

1. Housing
   Clean housing fitting surfaces,and check the blockage of the water channel and oil passage
2. Camshaft and tappet stem
   (see pageEN-38)
3. Crankshaft
   (see pageEN-50)

4. Crankshaft rear-seal
   (see page EN-48)
5. Flywheel and engine body backboard
6. Water pump
7. Timing gear housing
   (see page EN-52)
8. Piston and connecting rod assembly
   (see page EN-42)
9. Engine oil pump assembly
   (see page EN-33)
10. Oil pan assembly
    (see page EN-33)
11. Timing gear
    (see page EN-25)
12. Engine oil filter assembly
    (see page EN-29)

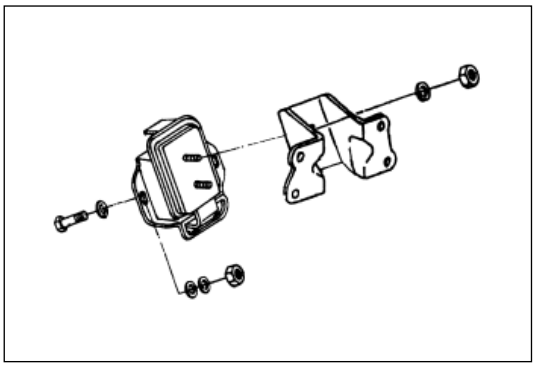

13. Enginge bracket
    Mount the engine bracket ,and screw the bracket fixing bolts to the specified torque
    screw down torque :40N・m

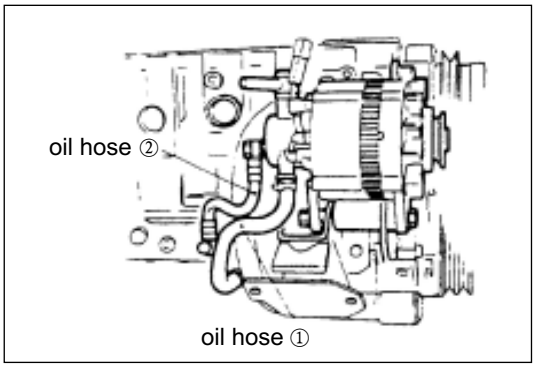

14. AC-generator assembly
    (a) Tight AC-generator fixing bolts temporarily
    (b) Connect vacuum pump engine oil hose ① to the oil pan
    (c) Connect vacuum pump engine oil hose ② to the housing
    (d) Connect AC-generator wire connector
15. Cylinder cover assembly
16. Engine assembly
    (see page EN-5)
17. Transmission assembly and clutch assembly
    (see page EN-31)

Fuel system

General

The following should be observed when being engaged in working on the fuel supply system:

(1) Whenever the fuel supply system is working, earth wire of the battery should be cut off.

(2) Dry chemical fire extinguishers (level B) should be kept around the work place.

(3) Change all the removed oil pipes and attachments for new ones which are the same types as the removed.

(4) Before repairing parts of the fuel supply system, pressure in the pipelines should be released.

(5) Do not repair the fuel supply system without reading instruction books or checking the drawings on repairing.

The fuel oil flow

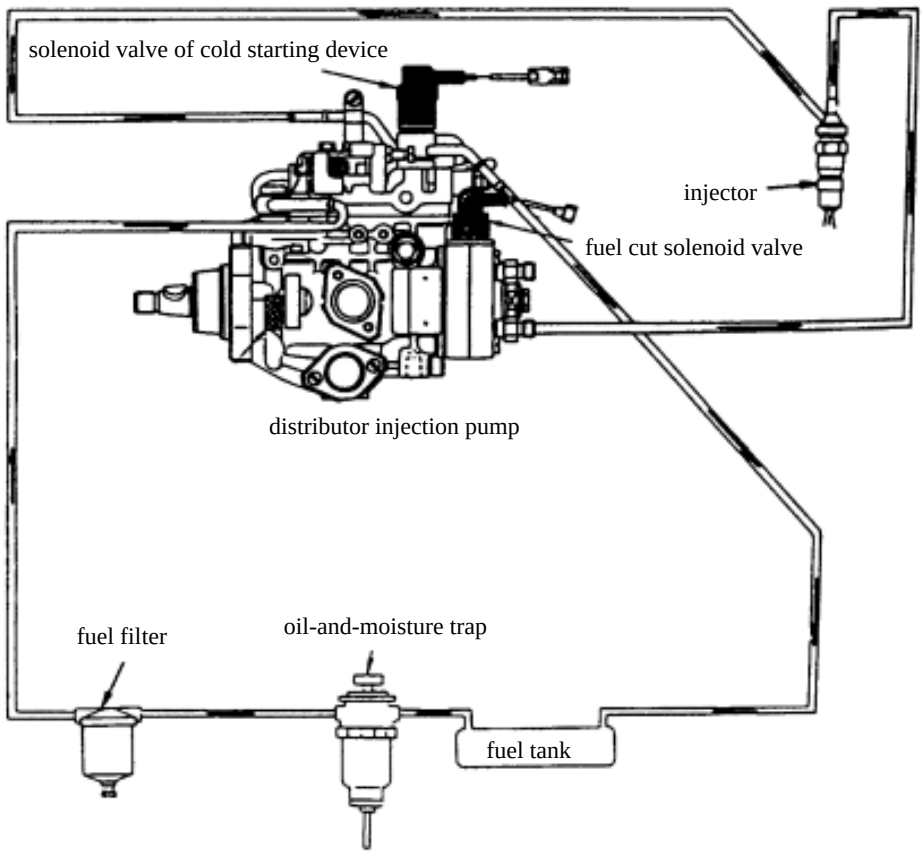

The fuel supply system consists of a fuel tank, an Oil-and-moisture trap, a fuel filter, an injector and an injection pump.

Fuel in the fuel tank flows through the Oil-and-moisture trap and fuel filter (to filter off water and other impurities) and the injection pump plunger. Some fuel is fed to the injector in an optimal time, and then is injected to the cylinder with certain time, certain quality and certain quantity.

Injection pump

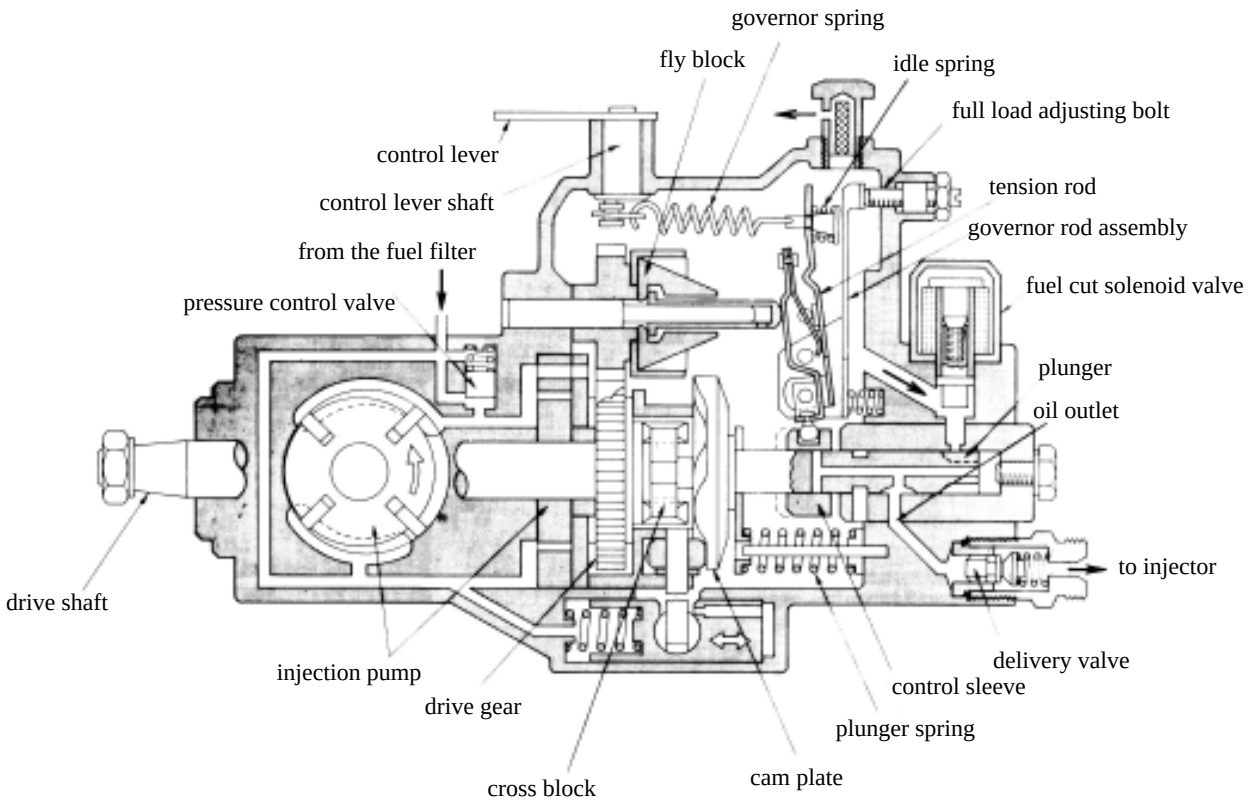

The Bosch distributor injection pump is used in the GW4D28 type diesel motor. The fuel is fed to each injector uniformly by a to-and-fro/rotary type plunger, which has nothing to do with the serial numbers.

The governor, the fuel supply automatic advance and fuel pump are all set inside the injection pump case. The injection pump which is compact and light can run with high speed reliably.

The fuel filter and Oil-and-moisture trap

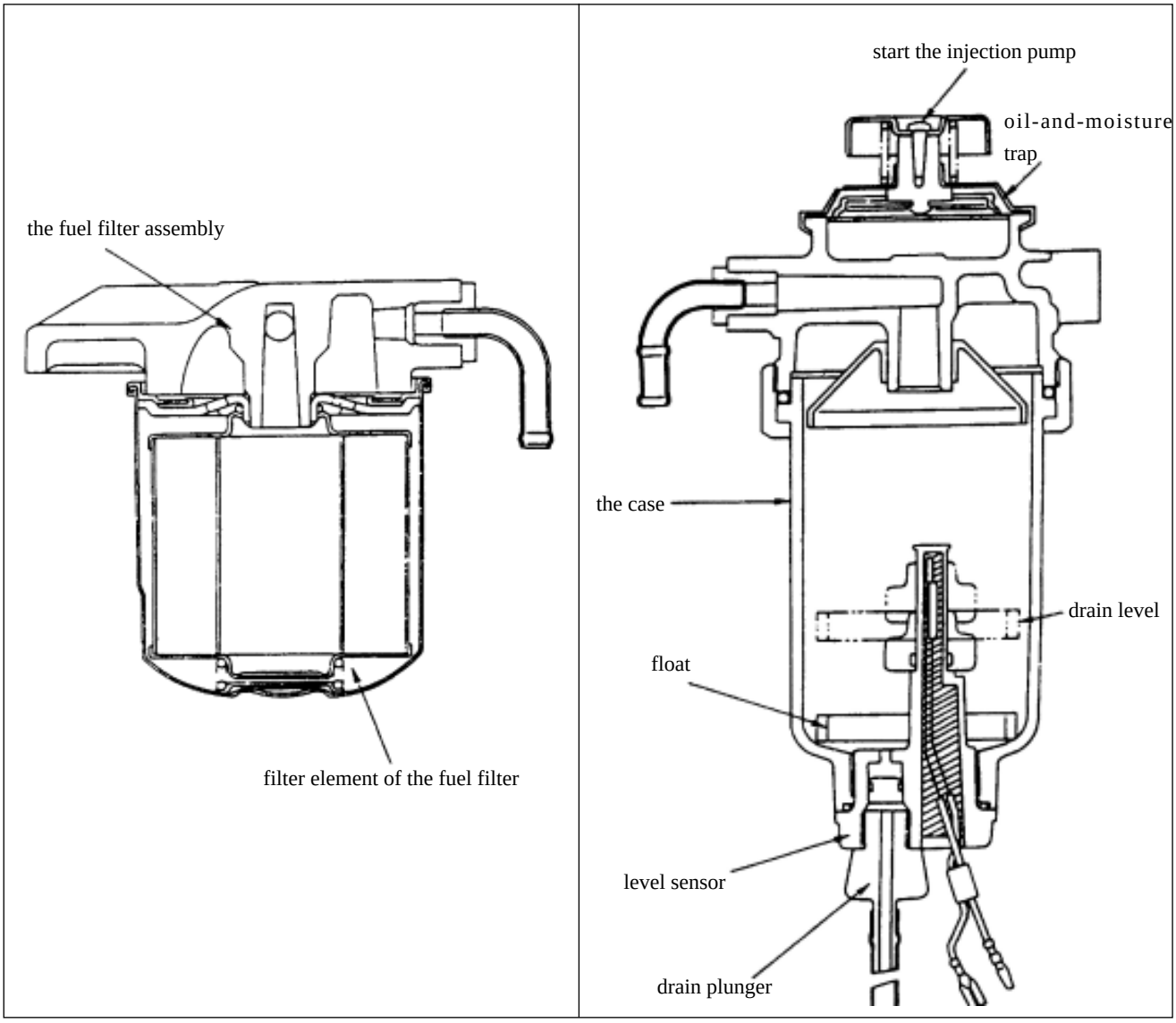

There is a fuel filter with filter element and an Oil-and-moisture trap, besides the distributor injection pump.

The interior of oil injection pump is lubricated by flowing fuel oil. The fuel should be clean. Before fed to the injection pump, fuel should flow through the fuel filter and the Oil-and-moisture trap in order to remove water and other impurities in the fuel.

There is a float inside the Oil-and-moisture trap. When the float rises to certain level, the warning lamp will give signals that it is time to release water in the Oil-and-moisture trap.

The thin-film fuel injection pump is set on the top of Oil-and-moisture trap. It will be used when releasing the water and air.

The injector

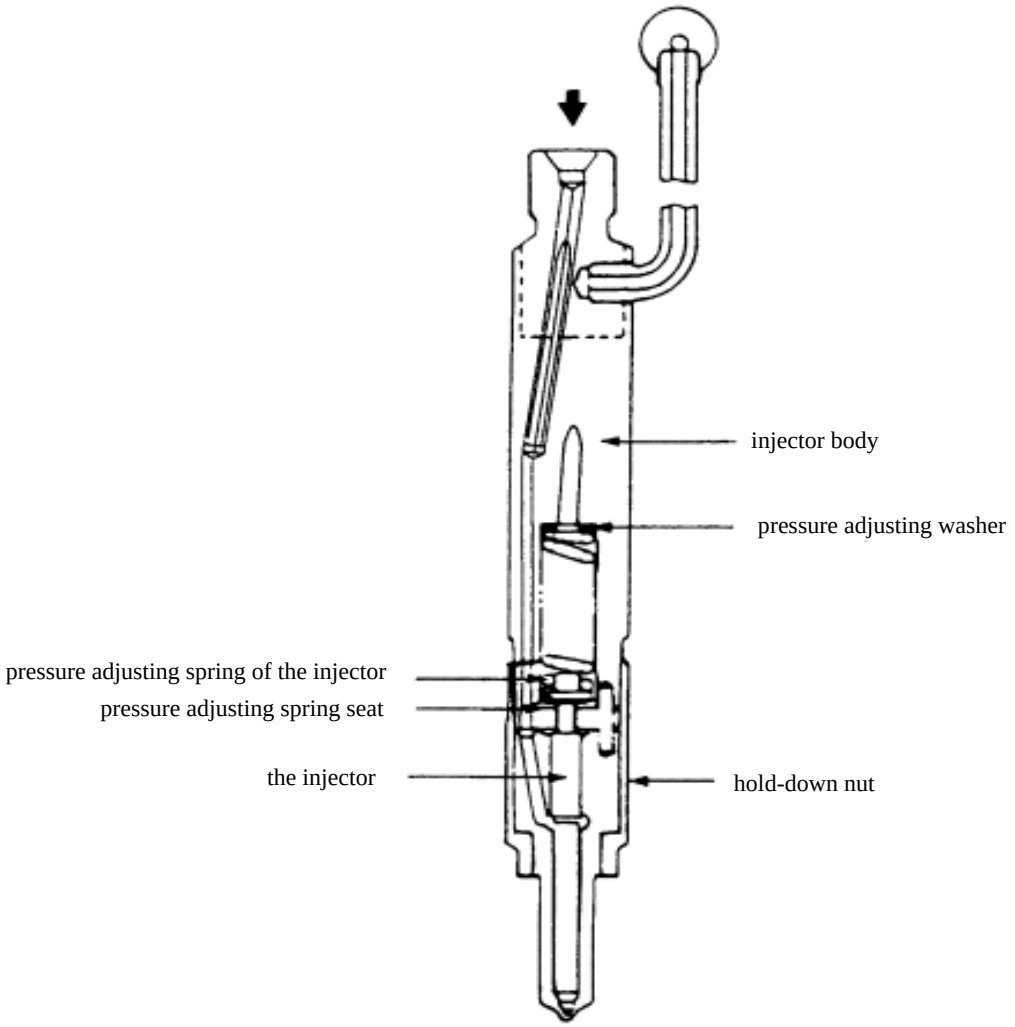

The high pressure fuel, which is from the injection pump, is injected to combustion chamber by the injector through the injection hole.

The hole-type injector with four injection holes is used in the 4D28 engine. The injector consists of injector body and injector mated pair.

The high pressure fuel, which is from the injection pump, is injected to combustion chamber.

Maintenance and repair on the car

The fuel filter assembly

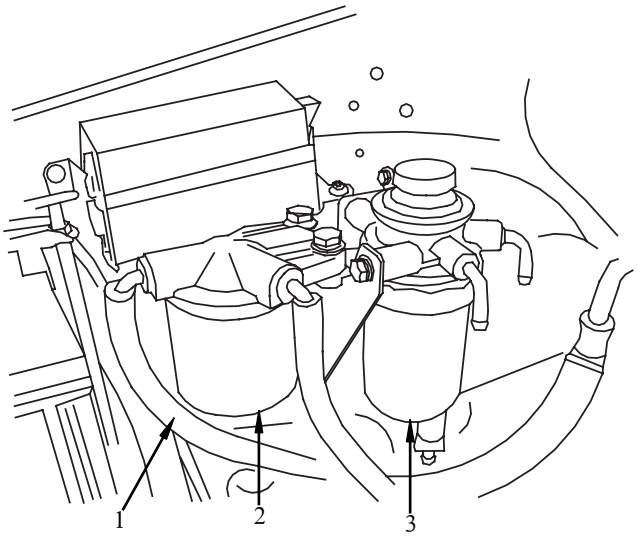

Disassemble order

1. fuel hose
2. fuel filter
3. oil-and-moisture trap

Assemble order

The assemble order is adverse to the disassemble order.

Disassemble

Preparing work

Cut off the earth wire of battery.

1. Fuel hose

   (a) Disassemble the fuel hose of fuel filter.

   (b) Plug the fuel hose end so the fuel can not overflow.

2. Fuel filter

   Disassemble the fix screws on the fuel filter bracket, then disassemble the fuel filter.

3. Oil-and-moisture trap

Assemble

1. Oil-and-moisture trap
2. Fuel filter

   Assemble the fuel filter and tighten the fix screws on the bracket.

3. Fuel hose

   (a) Connect the fuel hose to fuel filter.

   (b) Connect the earth wire of battery.

   (c) Feed the fuel to fuel injection pump by using starinjection pump and release air in the fuel supply system.

Filter element of the fuel filter

Disassemble

Disassemble the filter element by filter wrench.

Filter wrench: 5-8840-0253-0 (J-22700)

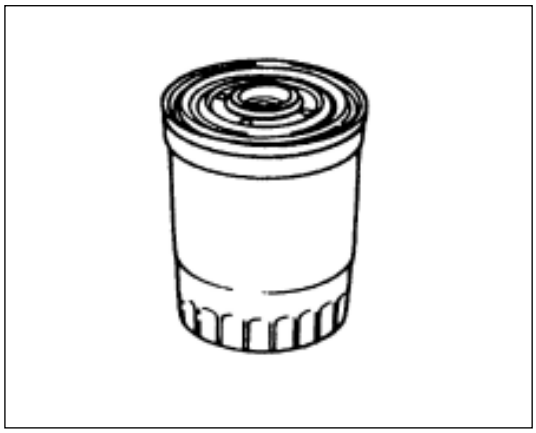

Assemble

(a) Clean the surface of filter element of fuel filter so the filter element can be well seated.

(b) Paint thin motor oil on the O ring of new filter element.

(c) Inject fuel to new filter element to remove air.

(d) Tighten the new filter element, until the O ring contact with the sealing surface. Be careful in order to prevent the fuel overflow.

(e) Tighten the filter element with 1/3 to 2/3 of a circle by using the filter wrench.
Filter wrench: 5-8840-0253-0 (J-22700)

Air release

(a) Operate the start injection pump so the air in the fuel supply system will be pushed to injection pump.

(b) Loosen the bleeder screw of injection pump and control the start injection pump until all air bubble be removed.

(c) Tighten the bleeder screw.

(d) Start the engine. If it were not started in 10 seconds, repeat the releasing process.

(e) Make sure that there is not any fuel leakage and tighten the cover of start injection pump.

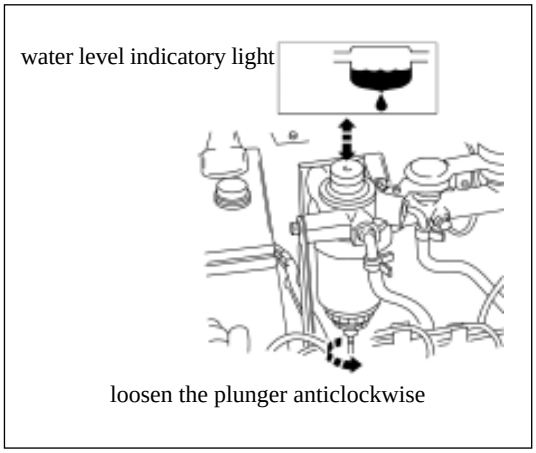

Water release

(a) When water in the Oil-and-moisture trap achieves certain level, the warning lamb will give signals. Release water as the following procedure.

(b) Put a vinyl hose on the plunger.

(c) Loosen the plunger.

(d) Control the start injection pump several times to release water.

(e) After releasing water, tighten the plunger.

(f) Control the start injection pump several times to check if there is any fuel leakage.

(g) Examine the warning lamb is on or off.

The injector

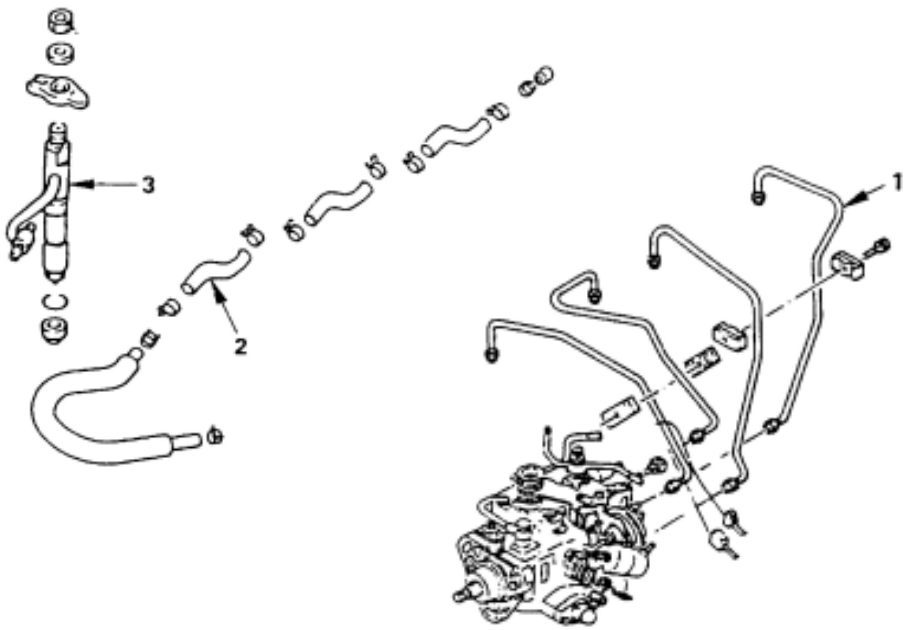

Disassemble order

1. high pressure oil pipe
2. oil return pipe
3. injector

Assemble order

The assemble order is adverse to the disassemble order.

Disassemble

Preparing work

Cut off the earth wire of battery.

1. High pressure oil pipe
   (a) Loosen the high pressure oil pipe fastener.
   (b) Loosen the conical nut of the injection pump.
   (c) Loosen the conical nuts of the injection pump, and remove the high pressure oil pipe and keep it in place.
2. Oil return pipe
3. Injector

Check and repair

(a) Install the injector on the tester.
(b) When the oil pressure is 18142.3KPa, check the injector head there is any leakage.
Change it if there is any leakage.

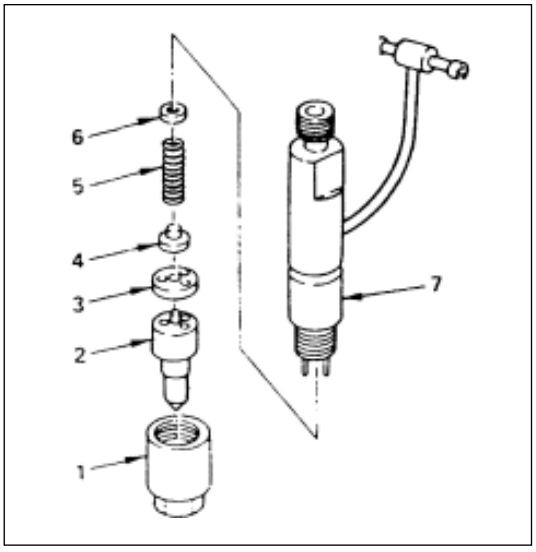

Disassemble

1. Clamp nuts
2. Injector nozzle matching parts
   (a) Disassemble every part from the injector body.
   (b) Label all the injector body and every part in order to set back when assembled.

   Notice:

   Do not change the combination of injector body and its parts.

   (c) Put the injector into a tool pan filled with clean diesel in order to guard dust.

3. Spacer ring
4. Pressure adjusting spring seat
5. Pressure adjusting spring
6. Pressure adjusting spacer
7. Injector body

Check and repair

Check the injector. If the injector is worn or damaged, it is necessary to adjust, repair or change.

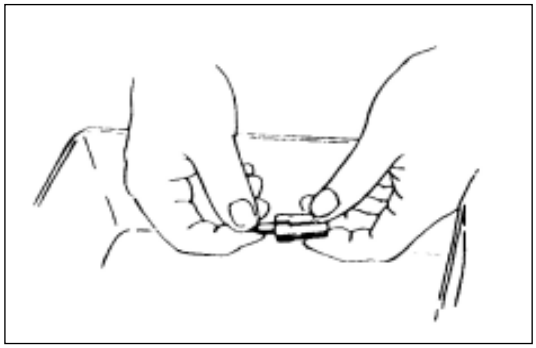

Check the injector mated pair

(a) Remove the injector valve from the injector valve body.
(b) Clean the injector valve and injector valve body by clean fuel oil.
(c) Check whether the injector valve can run smoothly or not. If not, do repair it (refer to the following ìthe grinding program of injector mated pairî)

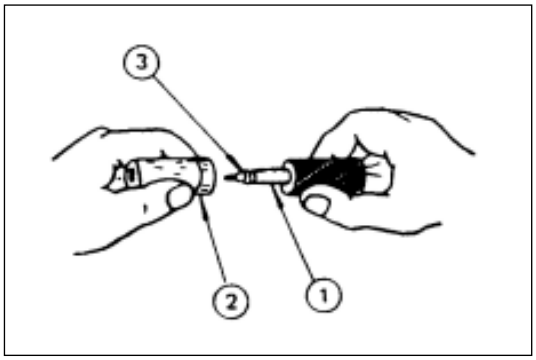

The grinding program of injector mated pair

(a) Grind the injector valve①and injector valve body② by chromic oxide and animal oil grinding paste ③.

Notice:

Do not use too much chromic oxide or animal oil grinding paste on the injector valve seat. Too much grinding paste will damage the injector valve and inner conical surface.

(b) After grinding, clean the injector valve and injector valve body by clean diesel.

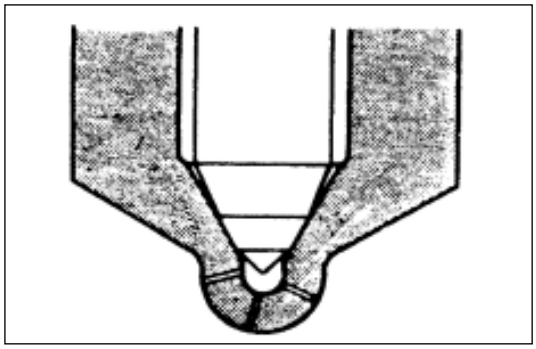

Check the injector valve and the injector valve body

Check the damage and distortion of the injector valve and injector valve body.

If the injector valve and the injector valve body are damaged or distorted, do change them.

Reinstall

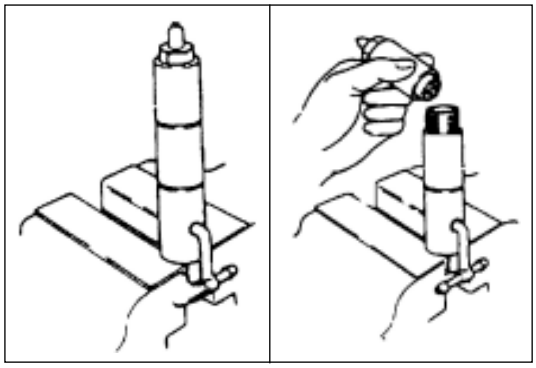

1. Injector body
2. Pressure adjusting spacer
3. Pressure adjusting spring
4. Pressure adjusting spring seat
5. Spacer ring
6. Injector mated pair
7. Clamp nuts

Tighten the clamp nuts to set torque.

Tightening moment: 69N • m

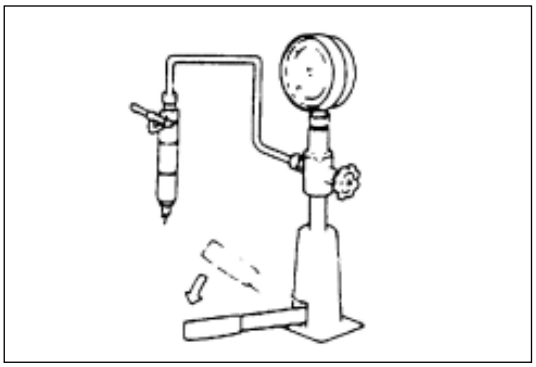

Injector adjustment

(a) Install the injector on the tester.

(b) Increase the test pressure and check the start condition under set pressure.

Pressure: 18142KPa

(1) If the injector can not work under set pressure, adjust it by adjusting spacer with suitable grade number.

Usable adjusting spacer mm

Thickness range	0.50-1.50
Grade thickness	0.025
Adjusting spacer assembly	40

(2) When one grade of the adjusting spacer is increased or reduced, the start pressure of injector can reduce or increase 369.71KPa.

Warning:

The testing liquid inside injector is injected under high pressure so it will hurt skins easily. When testing the injector, you should keep your hands far away the tester.

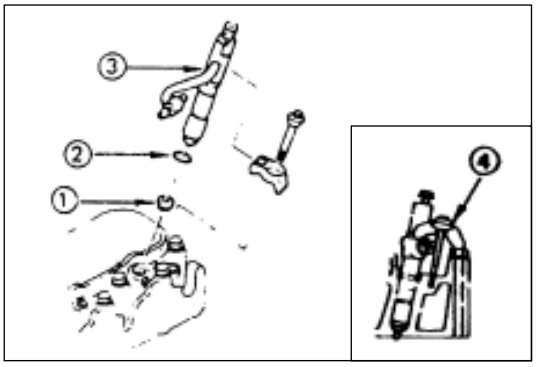

Assemble

1. Injector

(a) Install the injector sealing washer ① and the O ring ② to the injector body ③.

(b) Paint motor oil inside the mounting hole of injector body of the cylinder cover.

(c) Install the injector body ③, together with the pressure plate ④, on the cylinder cover and tighten the pressure plate screws to set torque.

Tightening moment: 37N • m

2. Return pipe
3. High pressure oil pipe

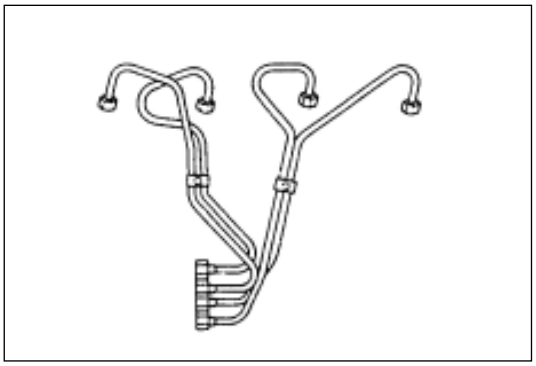

Injection pump assembly

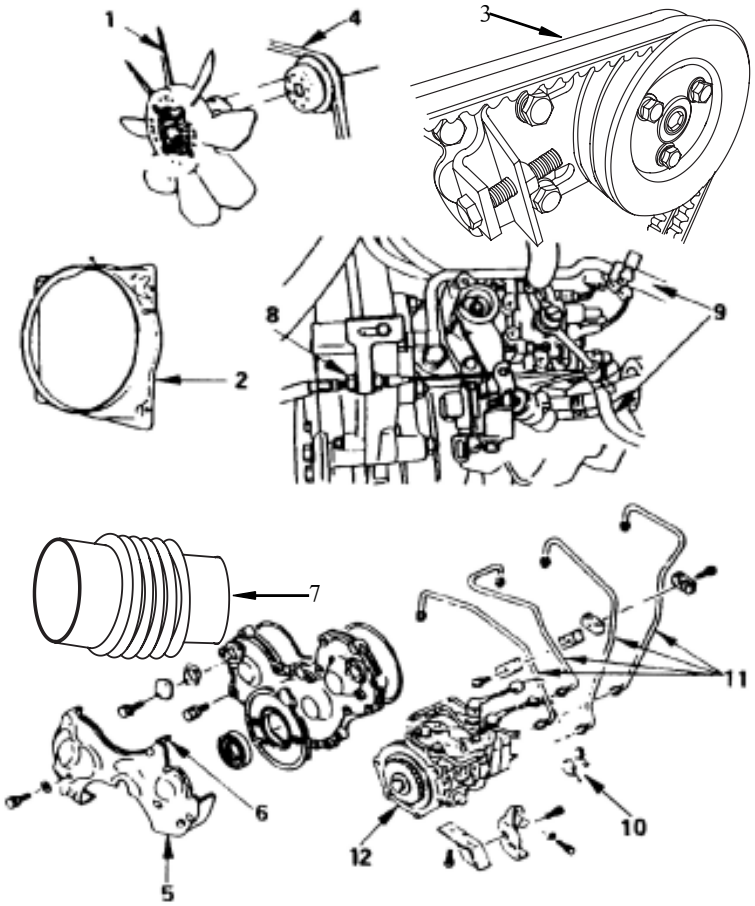

Disassembly order

1. the fan assembly
2. fan wind scooper
3. power steering pump and air-conditioning compressor belt
4. AC generator belt
5. sound barrier cover
6. spacer of sound barrier cover
7. air inlet guide pipe
8. control line of the injection pump
9. fuel hose
10. line group of the injection pump
11. high pressure oil pipe
12. injection pump assembly

Assembly order

The assemble order is adverse to the disassemble order.

Disassemble

Preparing work

Cut off the earth wire of battery.

Release cooling liquid.

1. The fan assembly

   Loosen the screws and remove fan assembly and belt pulley of water pump.

2. Fan wind scooper
3. Power steering pump and air-conditioning compressor belt

   Loosen the adjusting screws of the power steering pump and remove the belt.

4. AC generator belt

   Loosen the fixing screws (lower side) of AC generator and the lock screws of adjusting plate, and remove the belt.

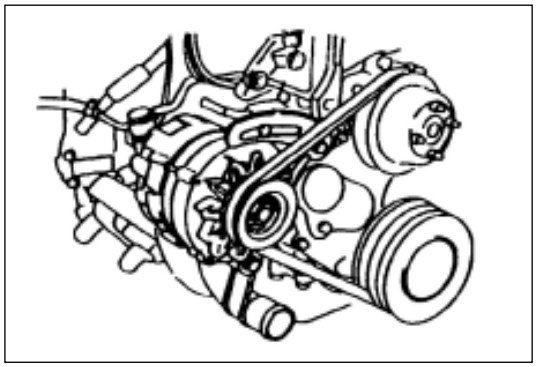

5. Sound barrier cover
6. Spacer of sound barrier cover
7. Air inlet guide pipe

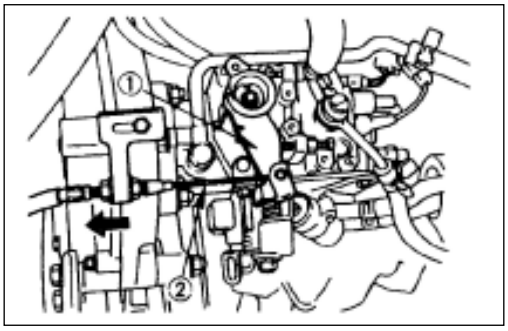

8. Control line of the injection pump

Disassemble the screws on the line bracket and remove the control line.

9. Fuel hose

Remove the fuel supply hose and return hose.

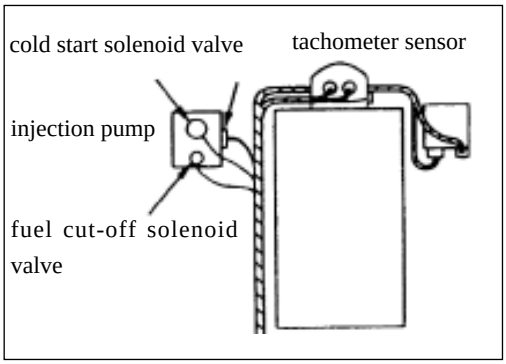

10. Line group of the injection pump

Remove the tachometer sensor (with the tachometer), solenoid valve of the cold start device (CSD) and the solenoid valve for fuel cut.

11. High pressure oil pipe

(a) Loosen the fastener of high pressure oil pipe.

(b) Remove conical nuts at the injection pump.

(c) Remove the conical nuts at the injection pump and remove the high pressure oil pipe.

Notice:

Do plug the holes on the injector body and delivery valve body to guard the impurities.

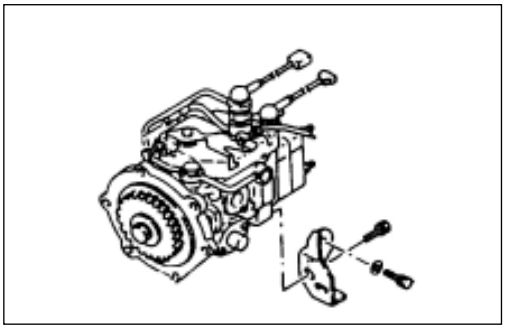

12. Injection pump assembly

(a) Remove the fixing screws of injection pump.

(b) Loosen the lock screws on the back bracket of injection pump.

(c) Remove the fixing screws at the engine side.

(d) Pull the injection pump from the back of engine.

Notice:

Do cover the holes on the delivery valve body by rubber lagging (or similar things) to guard impurities.

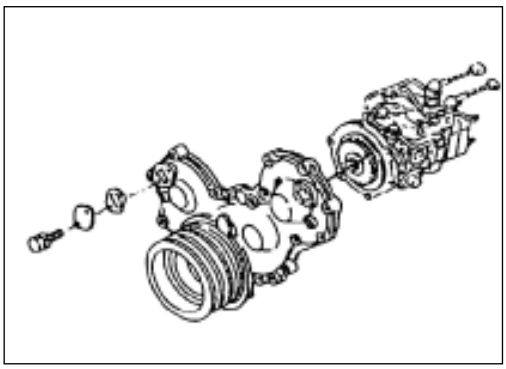

Assemble

1. Injection pump assembly

(a) Install checking holes at timing gear side of cam shaft of the timing gear housing and at the timing gear side of injection pump.

(b) Rotate the crankshaft in clockwise direction. Check the TDC mark on crankshaft belt pulley is aligning with the pointer. Stop the piston of the first cylinder at the upper dead center of the upstroke.

(c) Check 0 scale mark on the timing gear of crankshaft is aligning with the pointer through the checking hole at the crankshaft timing gear.

(d) Under the above conditions, align the 0 scale mark of injection pump gear with the pointer and install the injection pump assembly.

(e) Install the fixing screws of the injection pump and tighten the screws to set torque.

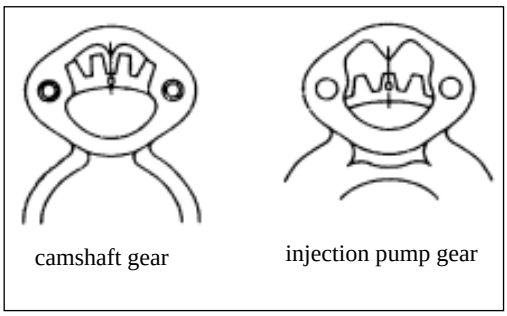

Tightening moment: 19N • m

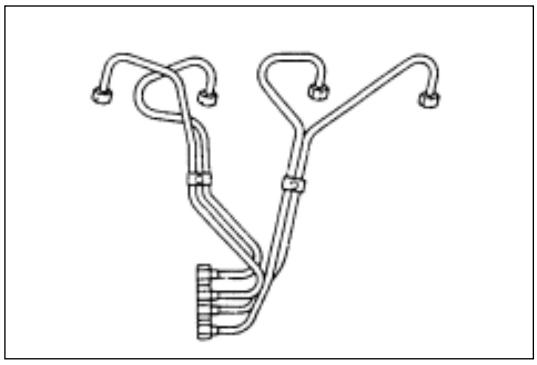

2. High pressure oil pipe
   (a) Connect the high pressure oil pipes at injection pump side and injector side, and tighten the conical nuts to set torque.
   Tightening moment: 29N • m
   (b) Install oil pipe fastener at the original location.
3. Line group of the injection pump
   Fix the line group of the injection pump and connect with switch.

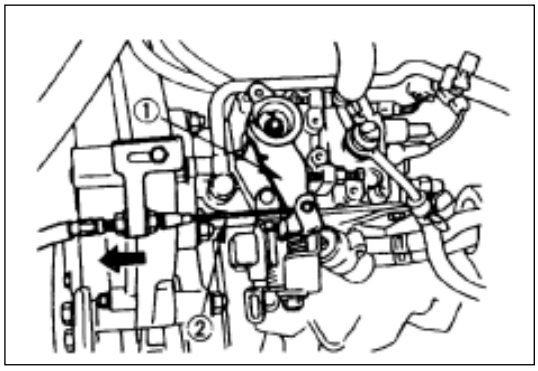

4. Fuel hose
   Connect the fuel inlet hose and the return hose.
5. Control line of the injection pump
   (a) Connect the steel cable with the control rod on the engine.
   (b) Leave the throttle lever at the oil complete-cut point and tension the control line in the direction indicated by the arrow, which can eliminate the relaxation.
   (c) Tighten the screws on the throttle control line bracket.
6. Air inlet guide pipe

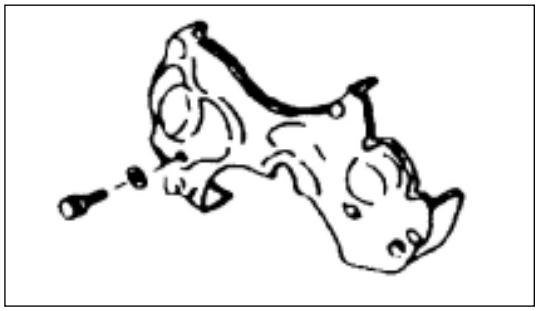

7. Spacer of sound barrier cover
8. Sound barrier cover

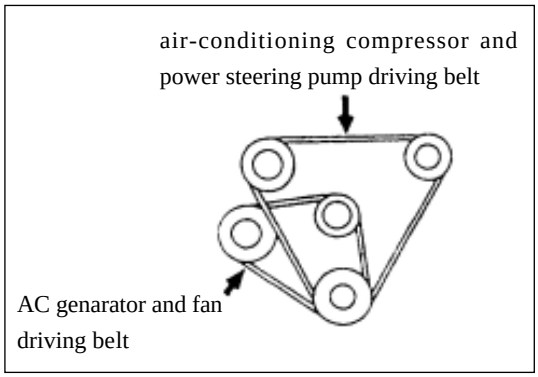

9. AC generator belt
   (a) Install the AC generator belt and adjust tightness of the belt.
   (b) Apply a force whose value is 98N onto the middle part of belt.
   Deflection of the belt: (8-10) mm
   (c) Install fixing screws and tighten to set torque.
   Tightening moment of the generator fixing screws: 25N • m
   Tightening moment of the adjusting plate: 19N • m

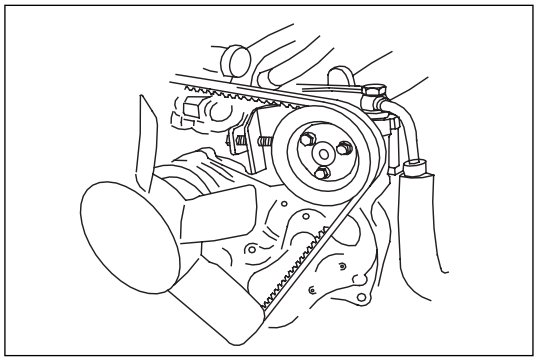

10. Power steering pump and air-conditioning compressor belt
    (a) Install the power steering pump and air-conditioning compressor belt and adjust its tightness.
    (b) Apply a force whose value is 98N onto the middle part of belt.
    Deflection of the belt: (8-10) mm
    (c) Tighten the fixing screws of the power steering pump and air-conditioning compressor to set torque.
    Tightening moment: 27N • m

11. Fan wind scooper

    Install the fan wind scooper and overflow tank hose.

12. Fan assembly

    (a) Install the belt pulley and cooling fan onto the water pump, and tighten the lock screw to set torque.

    Tightening moment:8N • m

    (b) Connect the earth wire of battery.

    (c) Fill with coolant.

    (d) Start the engine and check if there is leakage or not.

Fuel supply timing adjustment

(a) Locate the first cylinder at the top dead center.

(b) Remove the distributor top plug of injection pump.

(c) Remove cold start device by screwdriver.

(d) Install a dial gauge, and preset it with 1mm.

Measuring instrument: 5-8840-0145-0

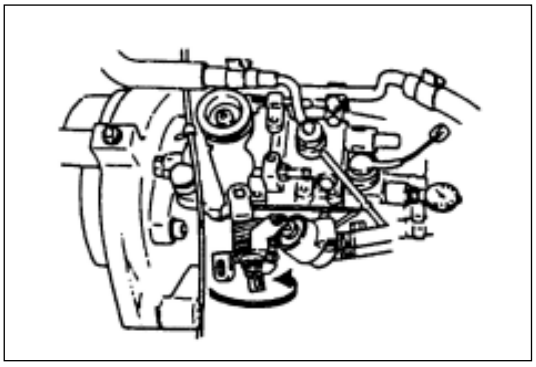

(e) Locate the top dead center mark of belt pulley of the crankshaft vibration damper at the position which is about 45 degrees to the top dead center.

(f) Adjust the dial gauge to “0” position.

(g) Rotate the crankshaft a little to left and to right. Check the indicator of dial gauge is at “0” stably.

(h) Rotate the crankshaft clockwise, and read the number on the dial gauge under the following condition.

14° before the top dead center, the reading on the dial gauge is 0.5mm

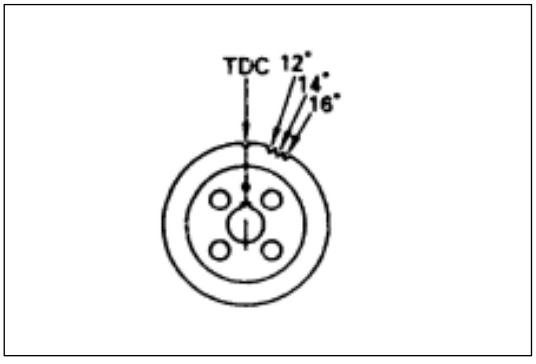

(i) If the reading is abnormal, loosen the fixing screws of injection pump and adjusting screws on the injection pump bracket. When the reading of dial gauge achieves certain value, tighten the fixing screws and nuts to set torque.

Tightening moment of fixing nuts on the injection pump: 24N • m

Tightening moment of fixing bolts on the injection pump: 19N • m

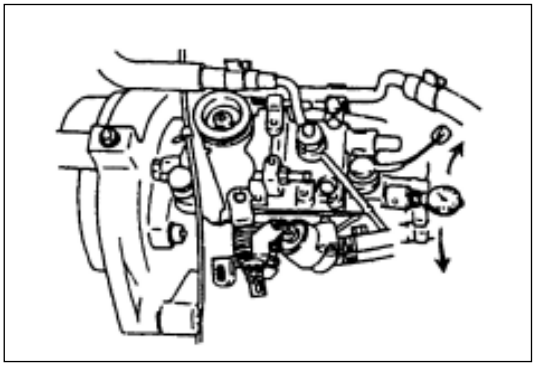

(j) Remove the measuring gauge, and tighten the distributor plug of injection pump to set torque.

Tightening moment: 17N • m

Notice:

- Do use new copper washers when install the injection pump plug.
- Install the high pressure oil pipe.
- Install the pipe fastener.

Parameters of injector

lem	sspecification
engine type	GW4D28
injector(bisch) type	p type:KBAL-P001A
Start pressure of injector kPa	18142
Size of high pressure oil pipe mm	
Inner diameter	÷ 1.6
Outer diameter	÷ 6.35
Length	400
Delivery pressure kPa	19.61
Test fuel	light diesel
Temperature of test fuel ℃	48-52

The characteristic diagram of injecting oil and adjuster

Engine: 4D28

Model of injection pump: NJ－VE4/11F1900LNJ03

adjustment of injection pump

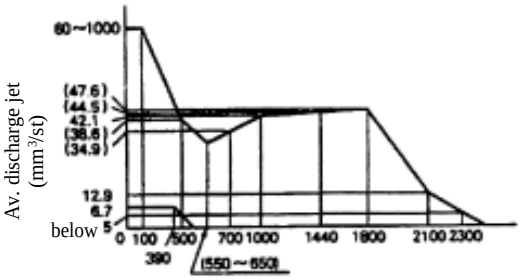

rotating speed of injection pump(r/min)

adjustment of fuel supply automatic advancer

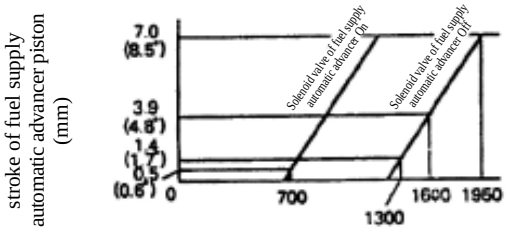

rotating speed of injection pump(r/min)

adjustment of speed control lever

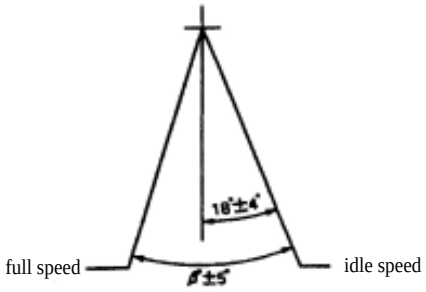

Adjustment Criterion

Rotating speed of injection pump r/min	Av. Discharge jet mm³/stroke	Range of unevenness	Fuel temperature ℃	Remarks
500	(38.6)		48 ±2	
700	(14.9) ±3		50 ±2	
1000	42.1 ±1	4.0	50 ±2	Standard
1450	(44.5) ±3		50 ±2	
1800	(47.6) ±3		60 ±2	
2100	12.9 ±3	4.0	52 ±2	
390	6.7 ±3	2.0	48 ±2	
100	60 ∽ 100		48 ±2	

Adjustment Criterion

Rotating speed of injection pump r/min	Stroke of fuel supply automatic advancer piston mm		Air pressure of injection pump (kPa)		Standard
	Solenoid valve of fuel supply automatic advancer		Solenoid valve of fuel supply automatic advancer		
	On	Off	On	Off	
700	0.5 ±2	–	–	–	
1300	–	1.4 ±0.1	–	–	
1600	–	3.9 ±2	–	0.5 ±1	Standard
1950	–	$7.0^{+0.1}_{-0.3}$	–	–	

Adjustment Criterion

Rotating speed of injection pump r/min	Height m	Air pressure difference (kPa)	Decreasing amount mm³/stroke	Decreasing rate %
1000	0	0	0	0
	(500)	– 5.5 ±0.3	Expansion point	Expansion point
	2000	– 21.9	– 4.6 ±1	– 11 ±3

Fuel tank

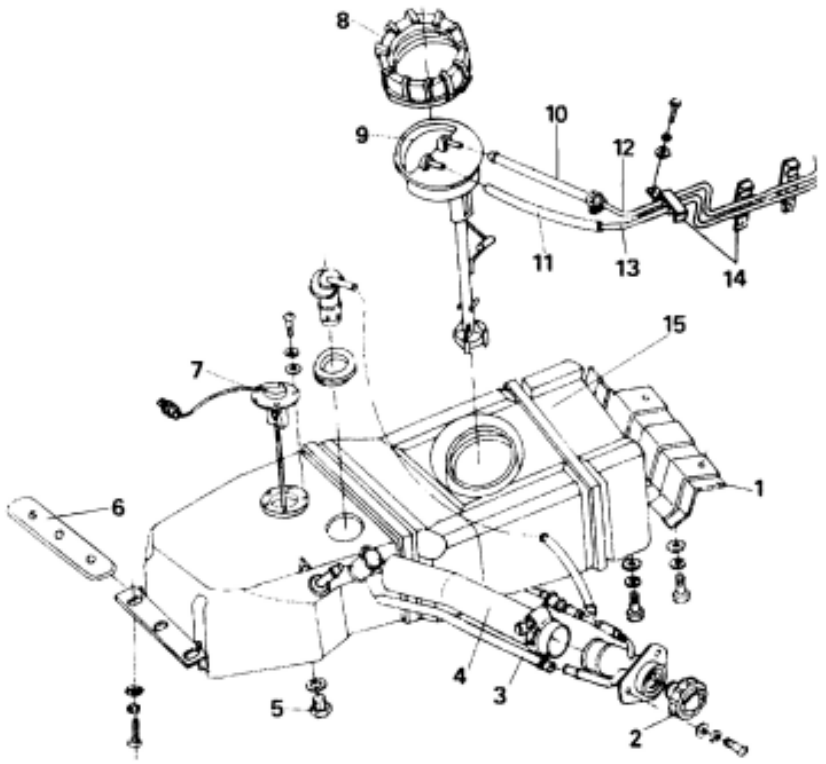

Disassemble order

1. guard plate of fuel tank
2. cap fastener of tank filler
3. air hose of tank filler
4. hose of tank filler
5. oil drain block
6. fuel tank cushion
7. fuel sensor
8. tank cap
9. filter screen
10. fuel tank outlet hose
11. oil return hose of fuel tank
12. fuel tank outlet pipe
13. oil return pipe of fuel tank
14. three-lined oil pipe fastener
15. fuel tank

Assemble order

The assemble order is adverse to the disassemble order.

Disassemble

Preparing work

Cut off the earth wire of battery.

1. Fuel tank plate
2. Cap fastener of tank filler
3. Air hose of tank filler
4. Hose of tank filler
5. Oil drain block
   (a) Loosen the oil drain block and release the fuel.
   (b) After releasing the fuel, tighten the block to set torque.
   Tightening moment: 29N • m
6. Fuel tank cushion
7. Fuel sensor
   Block the oil pipe joint after remove the pipe from the engine, which can avoid leakage.
8. Tank cap
9. Filter screen
10. Fuel tank outlet hose
11. Oil return hose of fuel tank
12. Fuel tank outlet pipe
13. Oil return pipe of fuel tank
    Block the oil pipe joint after remove the pipe from the engine, which can avoid leakage.
14. Three-lined oil pipe fastener
15. Fuel tank

Assemble

1. Fuel tank

   Notice:

   When install the fuel tank onto the frame, pay attention to set a cushion on the fuel tank of the frame.
2. Three-lined oil pipe fastener

   Tighten the fixing screws to set torque.

   Tightening moment: 19N • m
3. Oil return pipe of fuel tank
4. Fuel tank outlet pipe

   Connect the outlet pipe and return pipe with the engine and fastened by fastener.
5. Oil return hose of fuel tank
6. Fuel tank outlet hose
7. Filter screen
8. Tank cap
9. Fuel sensor

   Connect the fuel sensor with the fuel gauge.
10. Fuel tank cushion
11. Oil drain block
12. Hose of tank filler
13. Cap fastener of tank filler
14. Air hose of tank filler
15. Fuel tank plate

    (a) Tighten the fixing screws of the plate to set torque.

    Tightening moment: 55N • m

    (b) Fill fuel to the fuel tank.

    (c) Connect the earth wire of battery.

Fuel gauge

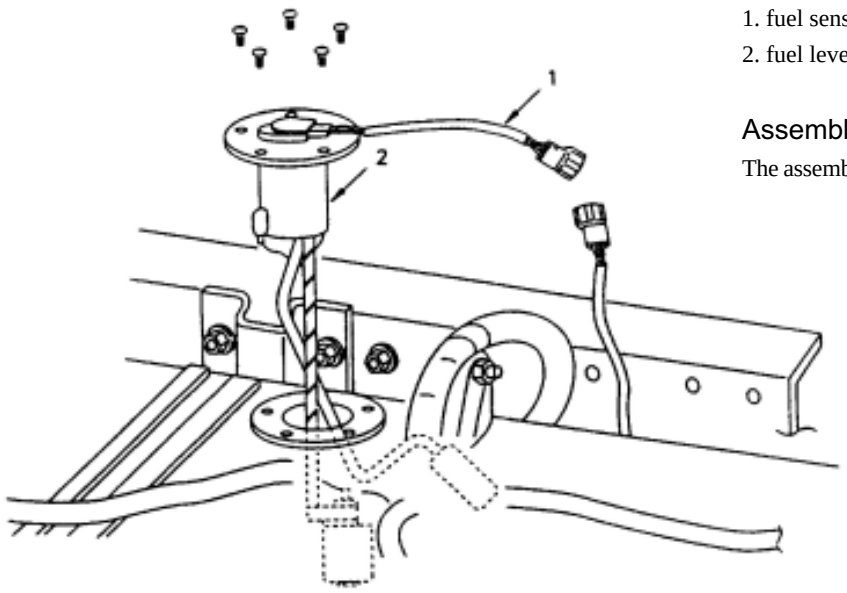

Disassemble order

1. fuel sensor
2. fuel level gauge

Assemble order

The assemble order is adverse to the disassemble order.

Disassemble

Preparing work

Cut off the earth wire of battery.

1. Fuel sensor

   Remove the fuel sensor from the fuel level gauge.

2. Fuel gauge

   Remove the fixing screws of fuel level gauge and the fuel gauge.

   Notice:

   After the fuel level gauge is removed, block the fuel tank inlet by cotton waste, which can guard the impurities.

Assemble

1. Fuel level gauge

   Install the fuel level gauge on the fuel tank.

2. Fuel sensor

   Connect the fuel sensor with fuel level gauge.

Throttle line

Control line of the throttle valve

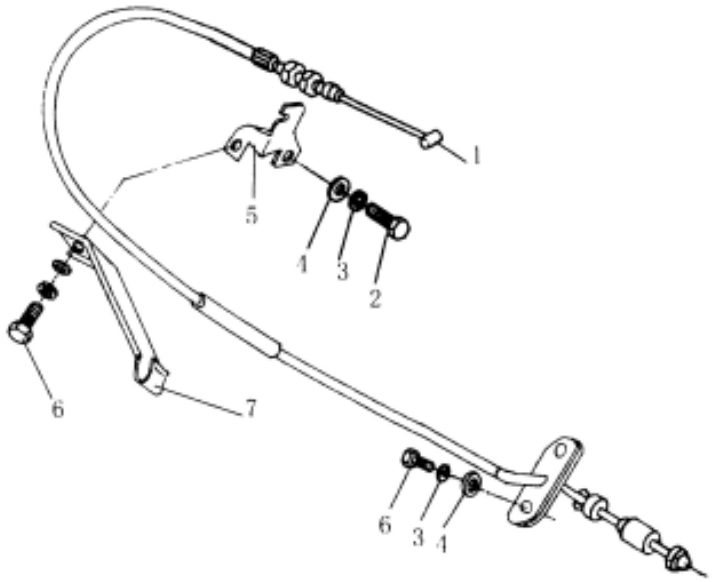

Disassemble order

1. control line of the throttle valve
2. bolts
3. spring washer
4. flat washer
5. throttle line frame (front)
6. bolts
7. throttle line frame (back)

Assemble order

The assemble order is adverse to the disassemble order.

Disassemble

1. Control line of the throttle valve

   Loosen the adjusting screws of the throttle bracket on the inlet pipe and remove the Control line of the throttle valve.
2. Bolts
3. Spring washer
4. Flat washer
5. Throttle line frame (front)
6. Bolts
7. Throttle line frame (back)

Check

Check the following items. Change the control line if there is abnormal condition.

(a) The control line should move flexibly.

(b) The control line can not bend or kink.

(c) The control line can not be damaged or corrupted.

Assemble

1. Throttle line frame (back)
2. Bolts
3. Throttle line frame (front)
4. Flat washer
5. Spring washer
6. Bolts
7. Control line of the throttle valve

   Connect the control line with the injector and tighten the adjusting screws on bracket.

Throttle pedal

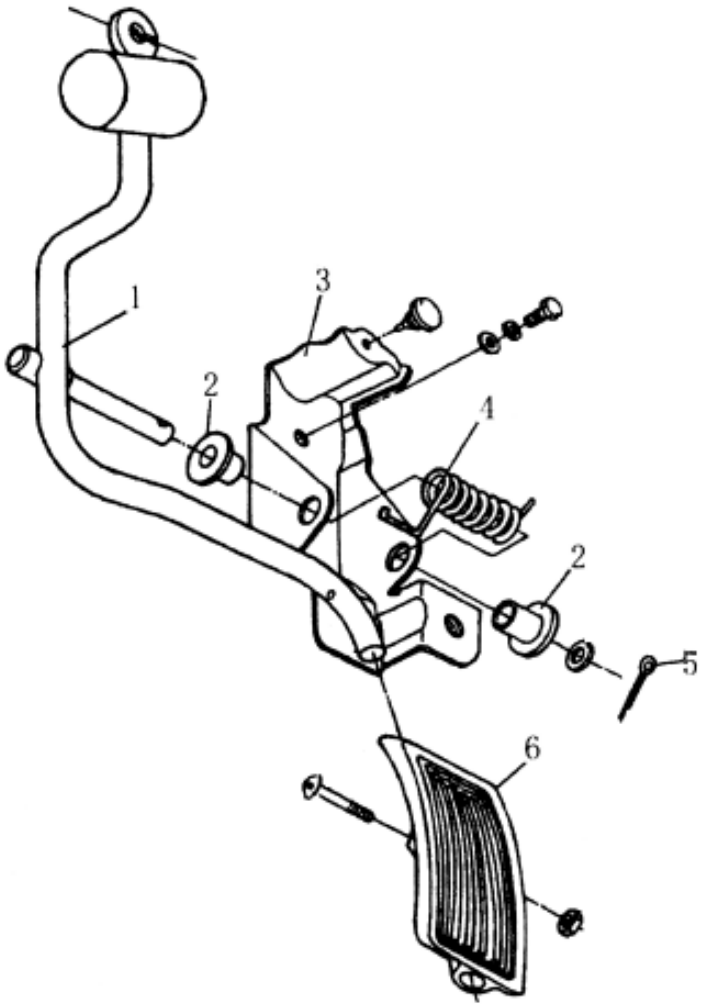

Disassemble order

1. accelerator lever
2. bracket case
3. bracket of accelerator lever
4. torsion spring
5. cotter pin
6. throttle pedal

Assemble order

The assemble order is adverse to the disassemble order.

Disassemble

1. Accelerator lever

   Remove the accelerator lever from the bracket.
2. Bracket case
3. Bracket of accelerator lever
4. Torsion spring
5. Cotter pin
6. Throttle pedal

   Loosen the fixing screws, and remove the throttle pedal from the cab side.

Assemble

1. Throttle pedal
2. Cotter pine
3. Torsion spring
4. Bracket of the accelerator lever
5. Bracket case
6. Accelerator lever

   Install the accelerator onto the bracket and fix it by cotter pins.

The adjustment of down force of the throttle pedal

(a) When finishing each control line, push the throttle pedal seat in order to press the pedal to end through full travel.

(b) Adjust the catch bolts to leave the clearance 0-2mm between the seat back and the catch bolt. Tighten the lock screws to set torque.

Tightening moment: 7.4N • m

(c) Check the clearance of throttle pedal. The normal clearance above the pedal seat is 5-10cm.

(d) Press the pedal to the end and check if the engine speed is the highest and stable.

(e) In the pedal working range, check whether the throttle pedal and injector lever can return their initial position freely or not.

Air filter

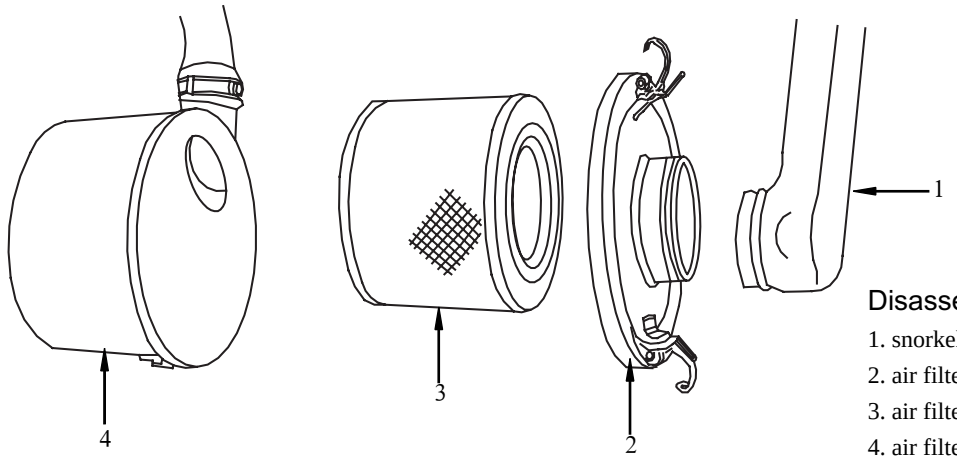

Disassemble order

1. snorkel tube
2. air filter cover
3. air filter element
4. air filter case

Assemble order

The assemble order is adverse to the disassemble order.

Disassemble

1. Snorkel tube
2. Air filter cover
3. Air filter element
4. Air filter case

Clean

(a) Clean the inside of air filter case.

(b) Clean the air filter cover.

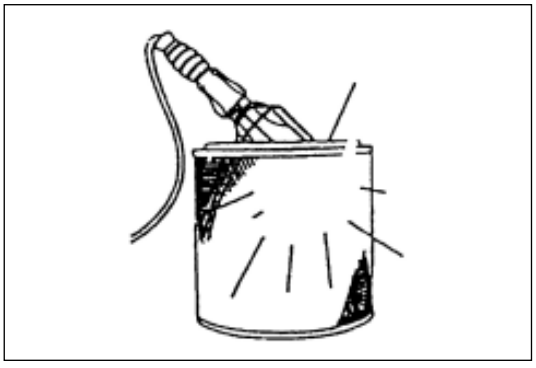

Check and repair

Check whether the air filter element is non-light-tight and has any little holes.

Cleaning measures

When the filter core is blocked by dust:

To blow off the dust in the filter core, use the compressed air to blow the filter core from the innner part of it to the outer part.

The pressure of the compressed air:(392-490)kpa

Remark:

In order not to damage it, the filter core should not be knocked when cleaning .

Carbon deposition and dust blocking the filter element

(a) Prepare the diluted cleaning liquid which is original of the Great Wall Company.

(b) Dunk the filter element in cleaning liquid for about 20 minutes.

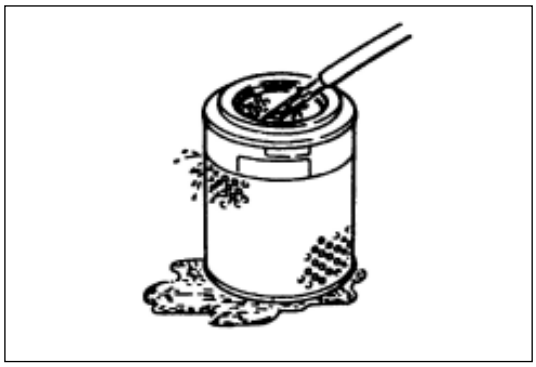

(c) After taking out the filter element from cleaning liquid, flush it carefully by water. The water pressure should not exceed 274Kpa.

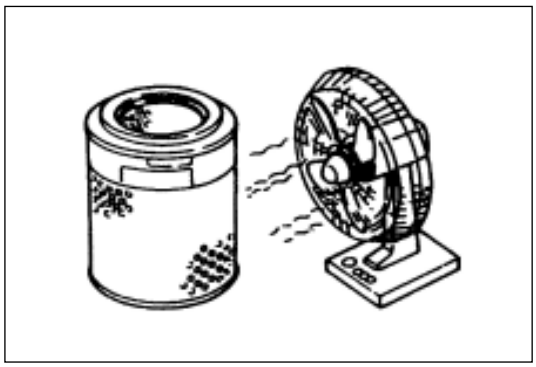

(d) Dry the filter element where is good ventilated. It is favorable to use a fan.

Notice:

Do not use compressed air or open fire to dry the filter element, or the filter element may be damaged. It is about two or three days to thoroughly dry the filter element. Thus, it is better to prepare a spare filter element.

Assemble

1. Air filter case
2. Air filter element
3. Air filter cover
4. Snorkel tube

Cooling system

Page

General

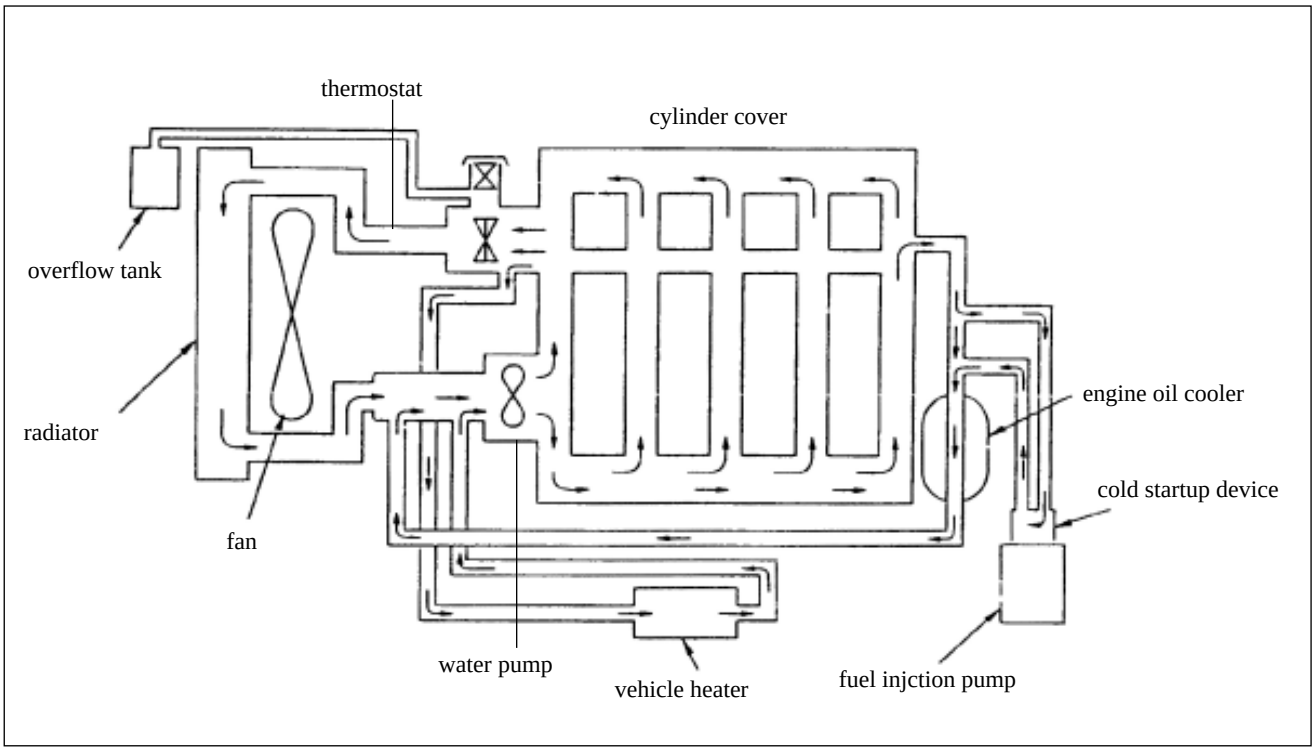

The cooling system of type 4D28 diesel engine is of pressured coolant forced circulating type. The system consists of water pump, thermostat, fan, radiator and other parts. Coarse oil in the filter is cooled by circulating coolant.

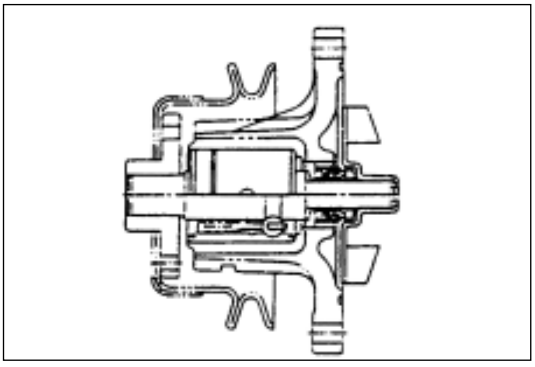

Water pump

Centrifugal blade type water pump, V -belt driven.

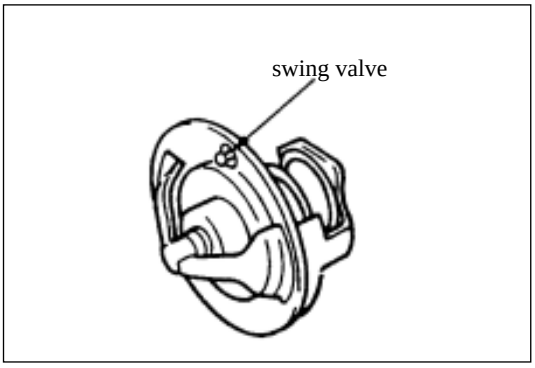

Thermostat

Wax pill thermostat, original valve is equipped with swing valvelet (swing valve).

Thermostat is equipped on thermostat body.

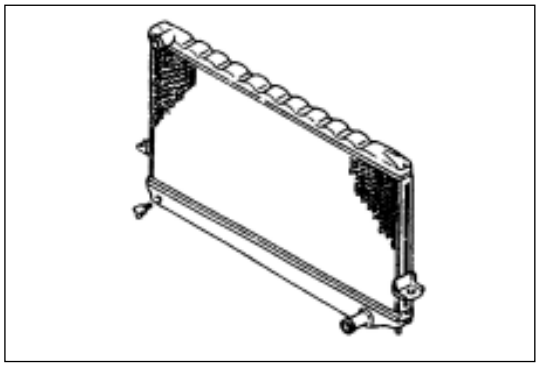

Radiator

Tube-band radiator for type 4D28 diesel engine. A valve with cover is equipped with thermostat body of cylinder cover to increase the boiling point of coolant which will open when the pressure reaches 88-118kPa.

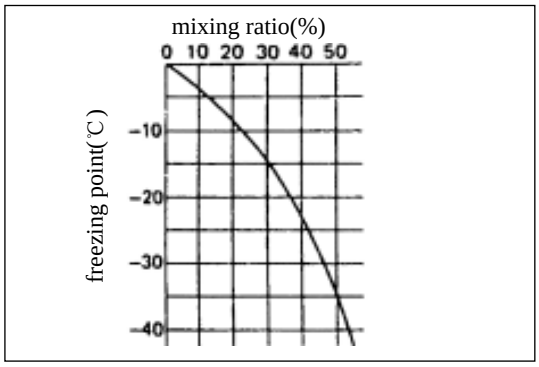

Anti-freeze fluid

(a) Relation between mixing ratio and freezing point
The freezing point temperature of engine coolant changes with the ratio of anti-freeze fluid in water. Right mixing ratio can be determined according to the curve diagram.

(b) mixing ratio calculation

$$\text{Mixing ratio} = \frac{\text{anti-freeze fluid (L)}}{\text{anti-freeze fluid (L) +water (L)}}$$

Attention:

Anti-freeze fluid+water=10L. Total capacity of cooling system.

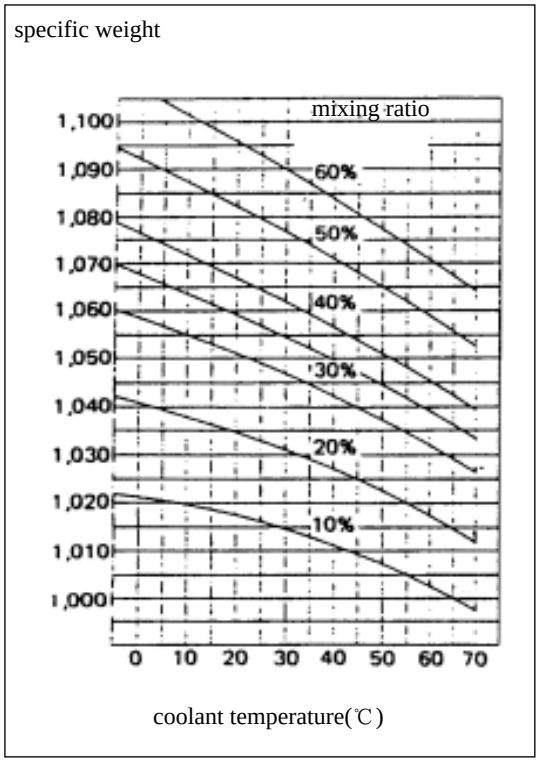

If the total capacity of cooling system is 10L, then:

Mixing ratio(%)	Anti-freeze fluid(L)	Water(L)
0	0	10
5	0.5	9.5
10	1.0	9.0
15	1.5	8.5
20	2.0	8.0
25	2.5	7.5
30	3.0	7.0
35	3.5	6.5
40	4.0	6.0
45	4.5	5.5
50	5.0	5.0

(c) Mixing ratio
Specific weight of coolant in engine cooling system at 0 ℃ to 50 ℃ can be measured with suction densitometer, and then the mixing ratio of coolant can be looked up in the curve diagram.

(d) The coolant is high quality ethylene-ethylene glycol (-35℃) based anti-freeze fluid.

On-vehicle repair

Water pump

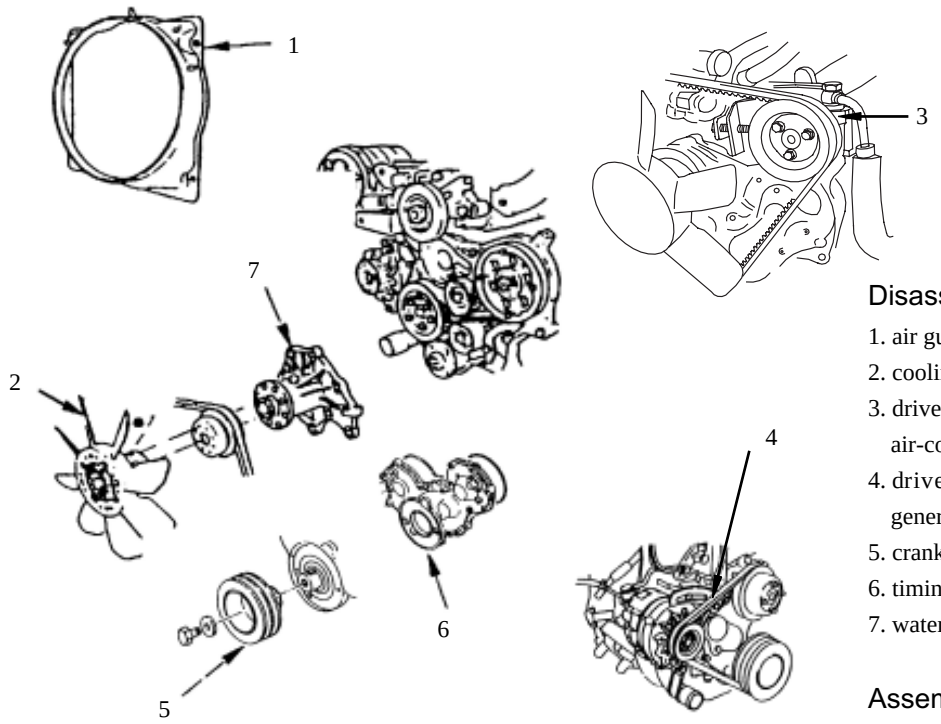

Disassembly procedure

1. air guide cover of cooling fan
2. cooling fan assembly
3. drive belt of power steering pump and air-conditioned compressor
4. drive belt of alternating current generator
5. crankshaft vibration damper pulley
6. timing gear house cover
7. water pump assembly

Assembly procedure

The assembly procedure is reverse of disassembly procedure.

Disassembly

Preparation

- Disconnect earthing cable of storage battery.
- Drain coolant.

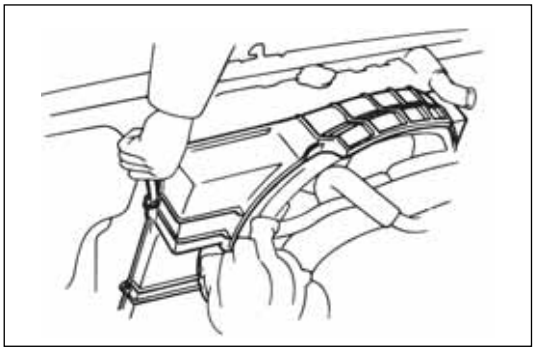

1. Air guide cover of cooling fan

   Remove overflow tank and air guide cover of cooling fan.

2. Cooling fan assembly

   Loose locknut and disassembly cooling fan assembly.

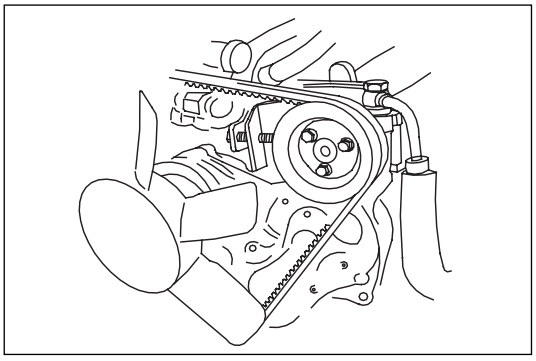

3. Drive belt of power steering pump and airconditioned compressor

   Loose adjustment bolt of power steering pump and disassembly drive belt.

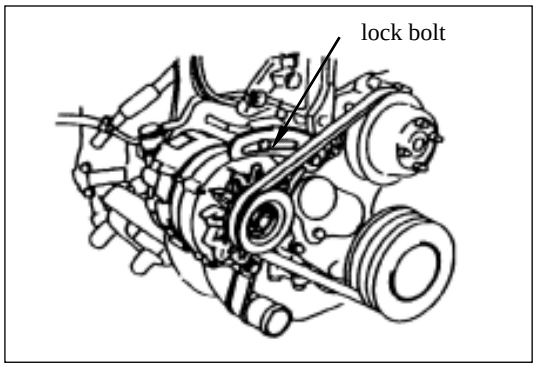

4. Drive belt of alternating current generator

   Loose bottom set point of alternating current generator and lock bolt of adjusting plate, dismount drive belt.

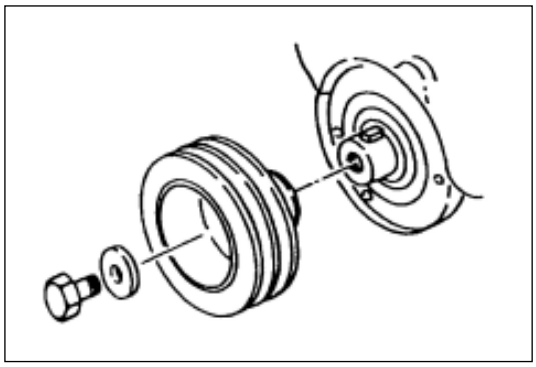

5. Crankshaft vibration damper pulley

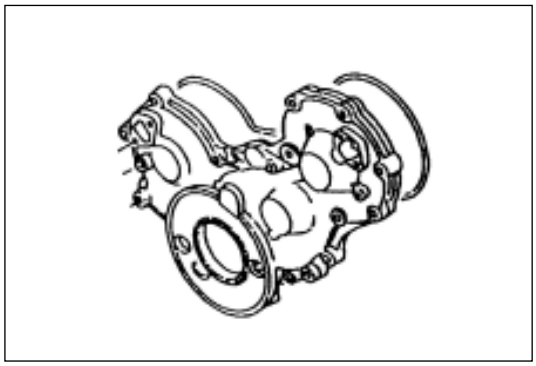

6. Timing gear house cover

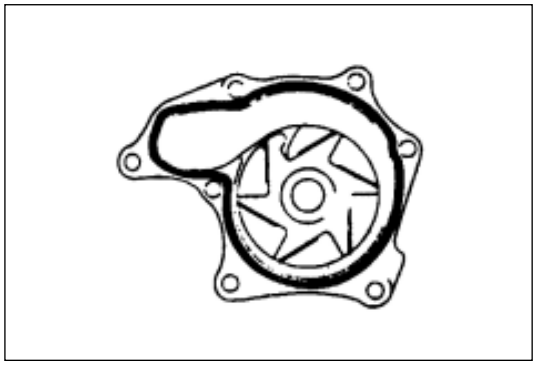

7. Water pump assembly

   Dismount water pump assembly, remove O-ring.

Inspection

If heavy wear or damage is found in inspection, necessary repair and replacement of parts shall be carried out. If any of following problem occurs, the water pump assembly must be replaced.

(1) Crack on water pump body
(2) Leakage of coolant from water seal
(3) Drunkenness of ball bearing or abnormal noise
(4) Crack or corrosion of water pump impeller

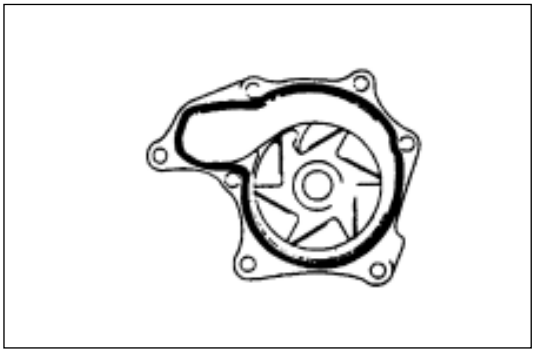

Assembly

1. Water pump assembly
   (a) mount O-ring into O-ring groove of water pump body.
   (b) Assemble water pump, screw down set bolt of water pump to prescribed torque: 20N • m

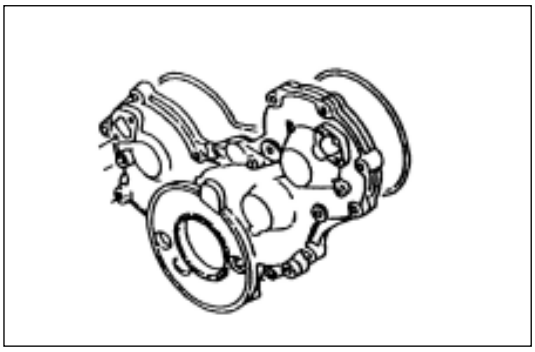

2. Timing gear house cover
   Assemble gear house cover and screw down set bolt of gear house cover to
   prescribed torque: 19N • m
3. Assemble crankshaft vibration damper pulley and screw down set bolt of pulley to
   prescribed torque: 206N • m

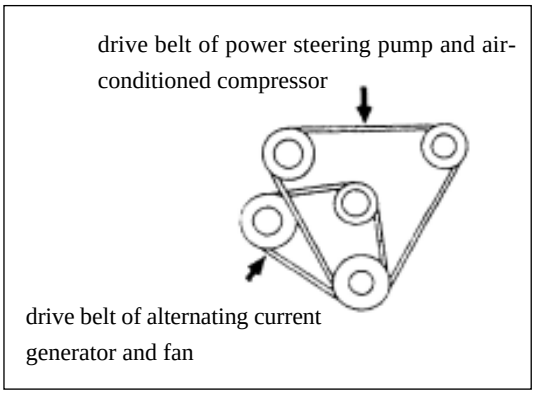

4. Drive belt of alternating current generator
5. Drive belt of power steering pump and air-conditioned compressor
   (a) Examine if there is wear or damage of drive belt, replace it when necessary.
   Examine the rate of tension of drive belt, adjust it when necessary.
   (b) Exert force of 98N on the middle section of the belt, examine deflection of each belt.
   Standard deflection :(8-12) mm

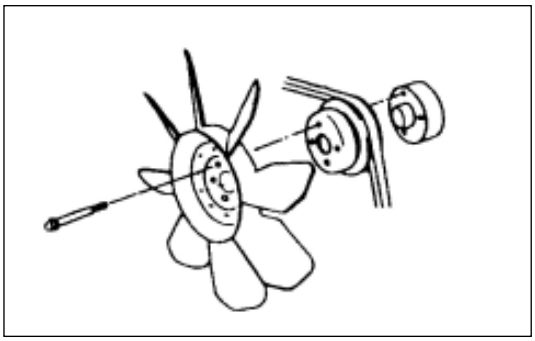

6. Fan assembly
   Mount water pump pulley and fan assembly onto water pump in turn, screw down lock nut to prescribed torque.
   Screw down torque: 8N • m

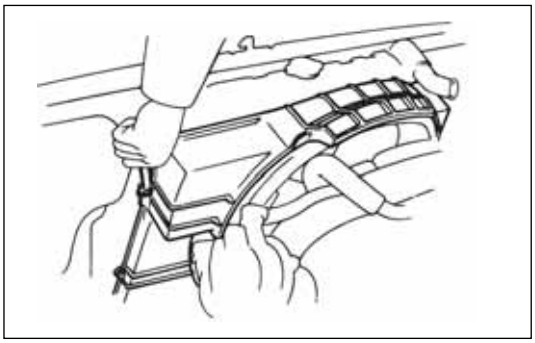

7. Air guide cover of cooling fan
   (a) Assemble air guide cover of cooling fan and overflow tank hose.
   (b) Connect storage battery earthing cable.
   (c) Fill in coolant.
   (d) Start engine and examine coolant leakage.

Single piece repair

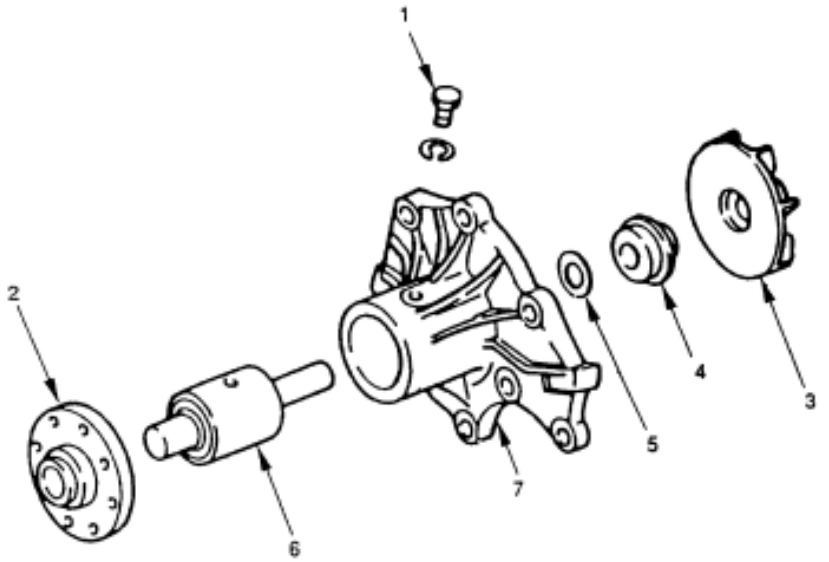

Disassembly

Disassembly procedure

1. set screw
2. centre flange of fan
3. water pump impeller
4. water seal assembly
5. oil slinger
6. bearing assembly
7. water pump body

Reassembly procedure

The disassembly procedure is reverse of assembly procedure.

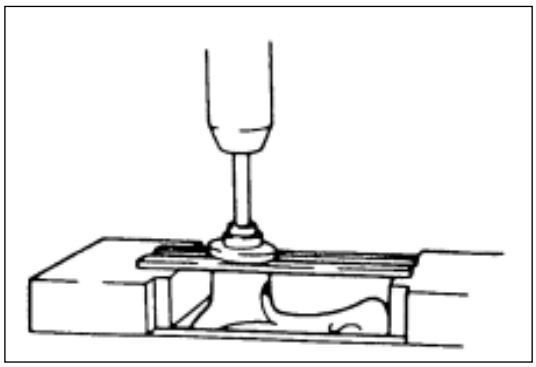

Disassembly

1. Set screw
2. Centre flange of fan

   Force down centre flange of fan using bench press and compression bar.
3. Water pump impeller
4. Water seal assembly
5. Oil slinge

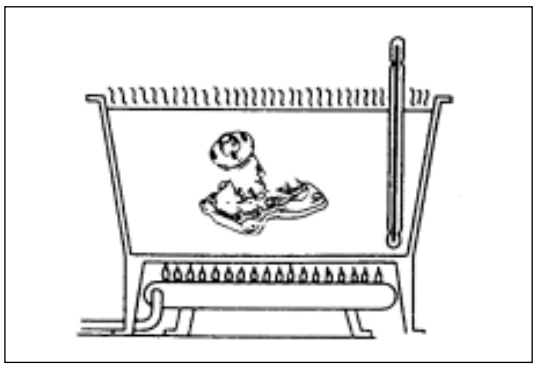

6. Bearing assembly

   (a) Heat up water pump body in hot water of 80 to 90℃

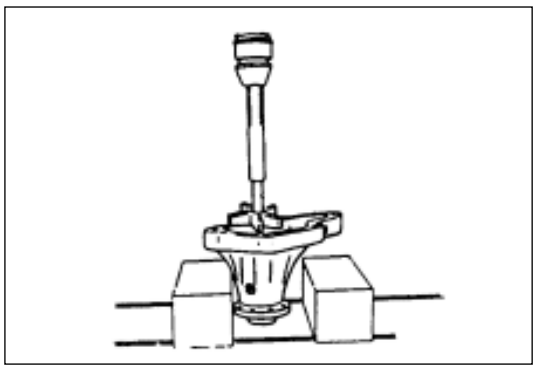

   (b) Force down water pump impeller, water seal assembly and bearing assembly using bench press and compression bar.

   Attention:

   Do not try to dismount water pump impeller with hammer, otherwise the impeller will be damaged.

7. Water pump body

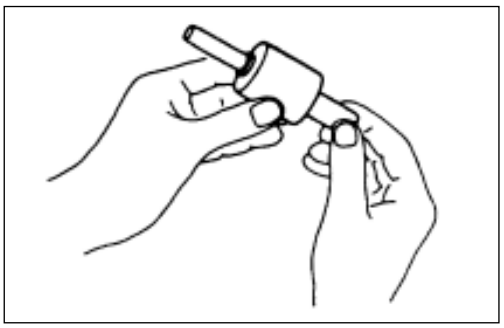

Inspection and maintenance

If heavy wear or damage is found in inspection, necessary adjustment, repair and replacement of parts shall be carried out.

Bearing assembly

Inspect if there is any noise, stagnant and other abnormal condition.

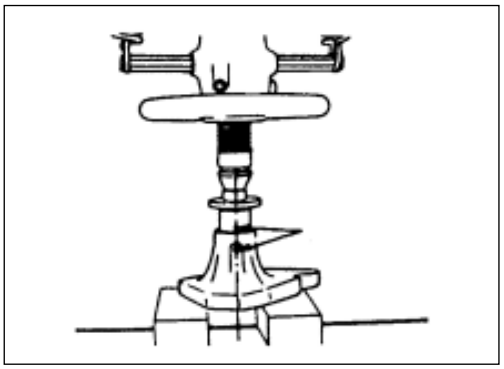

Reassembly

1. Water pump body
2. Bearing assembly
   (a) Force bearing assembly into water pump body.
   (b) Align the bearing set screw hole to set screw hole of water pump body.
   (c) Fix bearing assembly with set screw.
3. Set screw
4. Oil slinger

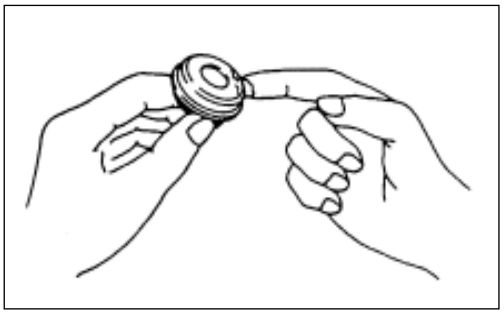

5. Water seal assembly
   (a) Apply a film of liquid sealant on the outer surface of water seal assembly.
   (b) Assemble water seal assembly.

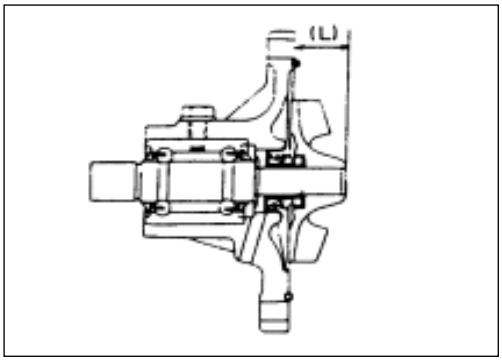

6. Water pump impeller
   (a) Mount water pump impeller with bench press.
   (b) Measure the distance between projection portion of water pump impeller and end surface of water pump body.
   The dimension (L) of projection portion on water pump impeller must be ensured which shall be 24mm.
7. centre flange of fan

   Measure the distance between fan fitting surface and back cover fitting surface.

   Standard value is 79.2 to 79.8mm.

   Attention:

   - Mount centre flange of fan and impeller of water pump onto water pump shaft with press machine. Do not dismount and mount centre flange of the fan and impeller of the water pump for the second time, otherwise, the total water pump assembly shall be replaced. The water pump will be damaged and overheated if centre flange of the fan and impeller of the water pump have been dismounted and mounted for the second time.
   - If the force applied on the centre flange of the fan and water pump impeller is less than 1960N, the water pump assembly must be replaced.
   - Do not knock the bearing into water pump body with hammer and the like, or the bearing will be damaged.

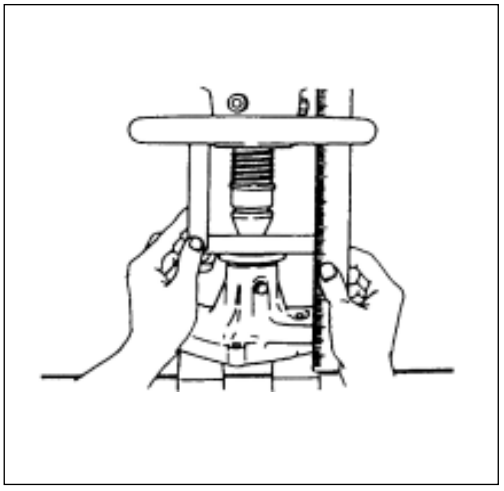

Thermostat

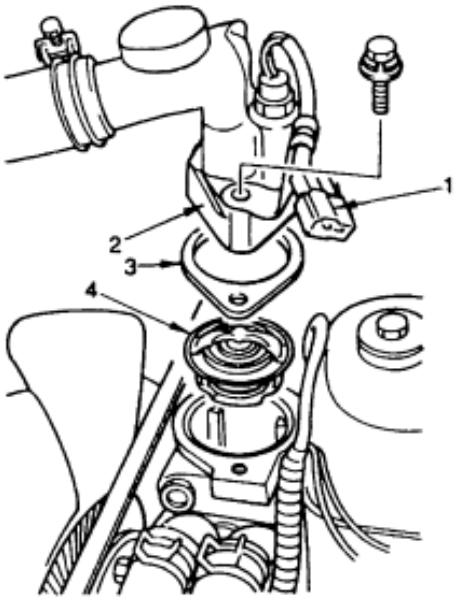

Disassembly procedure

1. socket joint part
2. thermostat top shell
3. thermostat gasket
4. thermostat

Assembly procedure

The assembly procedure is reverse of disassembly procedure.

Disassembly

Preparation

- Disconnect earthing cable of storage battery.
- Drain coolant.

1. Socket joint part
2. Discharge tube
   Dismount fixed bolt and remove thermostat top shell and radiator hose.
3. Thermostat gasket
4. Thermostat

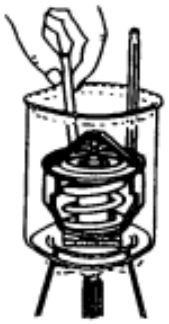

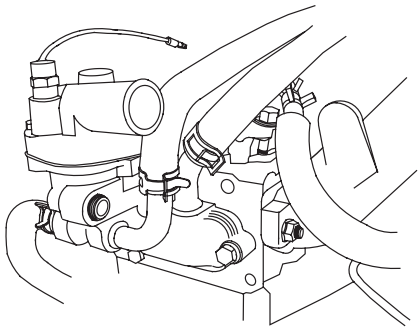

Inspection and maintenance

(a) Immerse the thermostat assembly into noncorrosive neutral fresh water.

(b) Place wood block on the bottom of the vessel. Do not heat thermostat directly.

(c) Increase water temperature gradually and stir the water to balance the water temperature in the vessel.

- Confirm that the main valve opens at prescribed temperature.

  Valve open temperature is 82

- Confirm that the secondary valve wide open at prescribed temperature.

  Valve wide open temperature is 95˚C

If found thermostat heavy wear or damage, necessary repair and replacement must be carried out.

Assembly

1. Thermostat
2. Thermostat gasket
3. Thermostat top shell
   Mount thermostat top shell and screw down the set bolt to prescribed torque.
   The screw down torque is 19N • m
4. Socket joint part
   - Connect the earthing cable of storage battery.
   - Fill in qualified coolant of prescribed quantity or to prescribed indication mark.
   - Start engine and examine if there is any coolant leakage.

Radiator

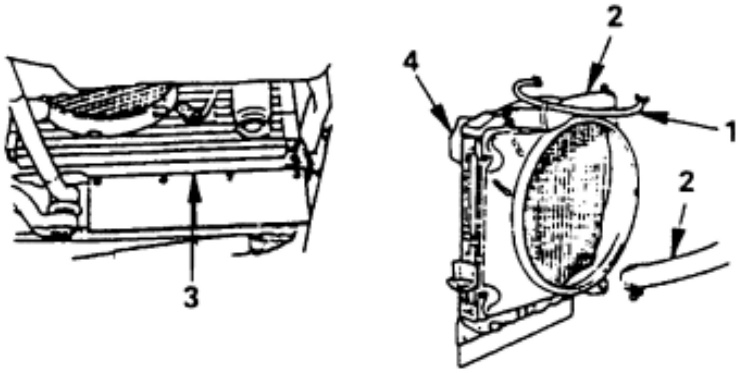

Disassembly procedure

1. overflow tank hose
2. radiator hose
3. condenser
4. radiator assembly

Assembly procedure

The assembly procedure is reverse of disassembly procedure.

Disassembly

Preparations

- Disconnect earthing cable of the storage battery.
- Drain coolant.

1. Overflow tank hose

   Remove overflow tank hose from the radiator.

2. Radiator hose

   Remove radiator top hose and bottom hose from the engine.

3. Condenser

   Remove condenser from the radiator and put it aside.

4. Radiator assembly

   Withdraw the radiator assembly upward together with hose.

   Pay attention not to scuff radiator core by fan blades.

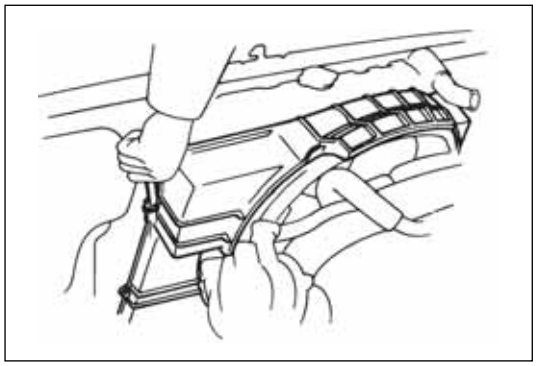

Inspection and maintenance

1. Radiator cover

   (a) Test response pressure of pressure valve with tester of radiator cover.

   Standard value of the response pressure is 88 to 118kPa.

   If the response pressure is larger than the standard value, the radiator cover shall be replaced.

   (b) Check the response pressure of vacuum valve in the centre of radiator cover valve seat.

   The standard value of the response pressure is 12.7 to17.0kPa.

   If the vacuum valve can not move smoothly because of corrosion or dust, the radiator cover shall be cleaned or replaced.

2. Radiator core

   (a) thermolysis will be decreased when the radiator deformed and the cooling system will be overheated. Flat the radiator fin and pay attention not to damage the root of radiator fin.

   (b) Remove dust, dirt and other foreign material.

3. Flush the radiator

   Flush the inner channels and coolant channels of the radiator with water and neutral liquid detergent. Remove all scale and deposit.

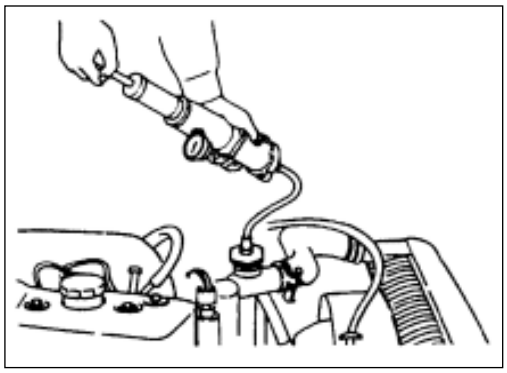

4. Examine coolant leakage

   Press the compressed air of 196.9kPa from radiator filling hole into the radiator with radiator cover tester. Examine if there is any coolant leakage in the cooling system.

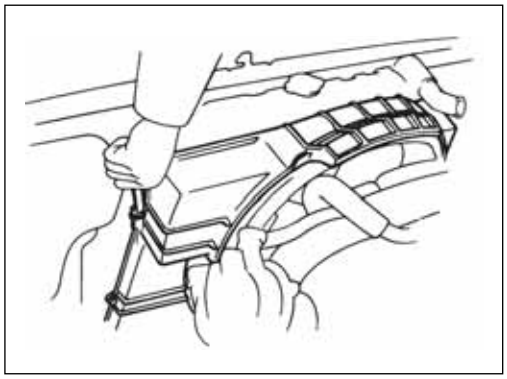

Assembly

1. Radiator assembly

   Assemble the radiator assembly with hose. Pay attention not to scuff the radiator core with the fan blades.

2. Condenser

   Mount the condenser onto the radiator.

3. Radiator hose

   (a) Connect the entrance hose of radiator and outlet hose with the engine.

   (b) Connect earthing cable of the storage battery.

   (c) Fill in qualified coolant to the neck of radiator filling hole and to the MAX mark of overflow tank.

4. Overflow tank hose

   Start the engine and warm up. Examine the level of coolant.

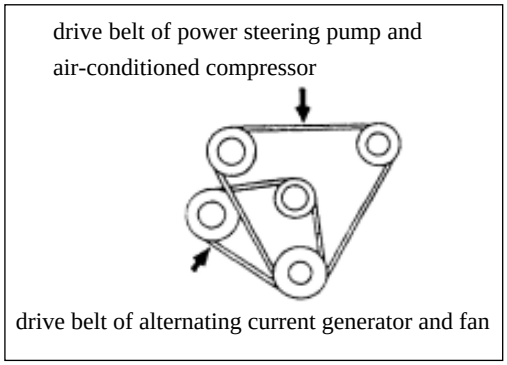

Adjustment of drive belt

Inspection and maintenance

(a) Examine if there is any wear or damage of drive belt, replace it when necessary.

(b) Examine the rate of tension of drive belt, adjust it when necessary.

(c) Exert force of 98N on the middle section of the belt, examine deflection of each belt.

Standard deflection: (8-12) mm

Adjustment of belt tension rate.

1. Belts of alternating current generator and fan pulleys

   (a) Loose alternating current generator support lock bolt, adjust belt tension rate with adjustment bolt on the adjustment plate.

   (b) Screw down set bolt to prescribed torque.

   Screw down torque of generator set bolt is 25N • m

   Screw down torque of adjustment plate set bolt is 19N • m

2. Power steering pump and air-conditioned compressor pulley belts

   Adjust belt tension rate with power steering pump adjusting bolt. Screw down lock nut of adjustment bolt after adjustment.

Starting system

Page

Summary

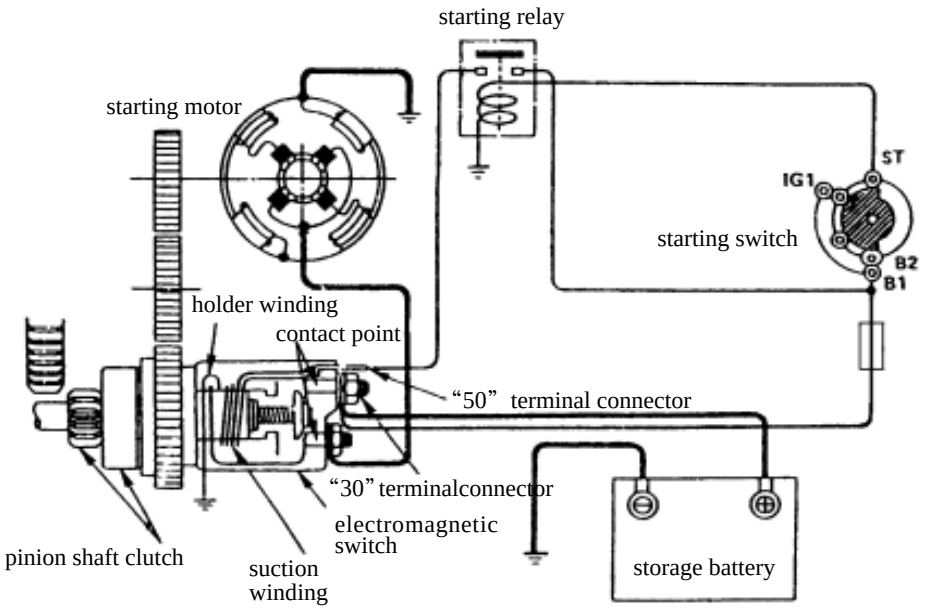

Starting system

Starting System is composed of storage battery, starting motor, starting switch, ignition lock, starting relay and so on. These components are connected as the diagram shown above, and it also can be used as the detailed specification of the starting circuit.

Starting motor

Starting system uses magnetic reduction motor; its bearing is also used as pinion shaft. when starting switch being closed, the magnetic switch contact point closes and causes the armature to rotate, attracts movable core and the tappet trundles the pinion shaft forward to mesh with ring gear at the same time ,then the ring gear rotates to starts the engine. When the engine starts up and the starting switch is unlocked, the movable core returns, the pinion disengages from the ring gear and armature stops rotating. The pinion runs without load while the speed of engine is much higher than which of pinion, so the armature isnít being driven.

Starting circuit

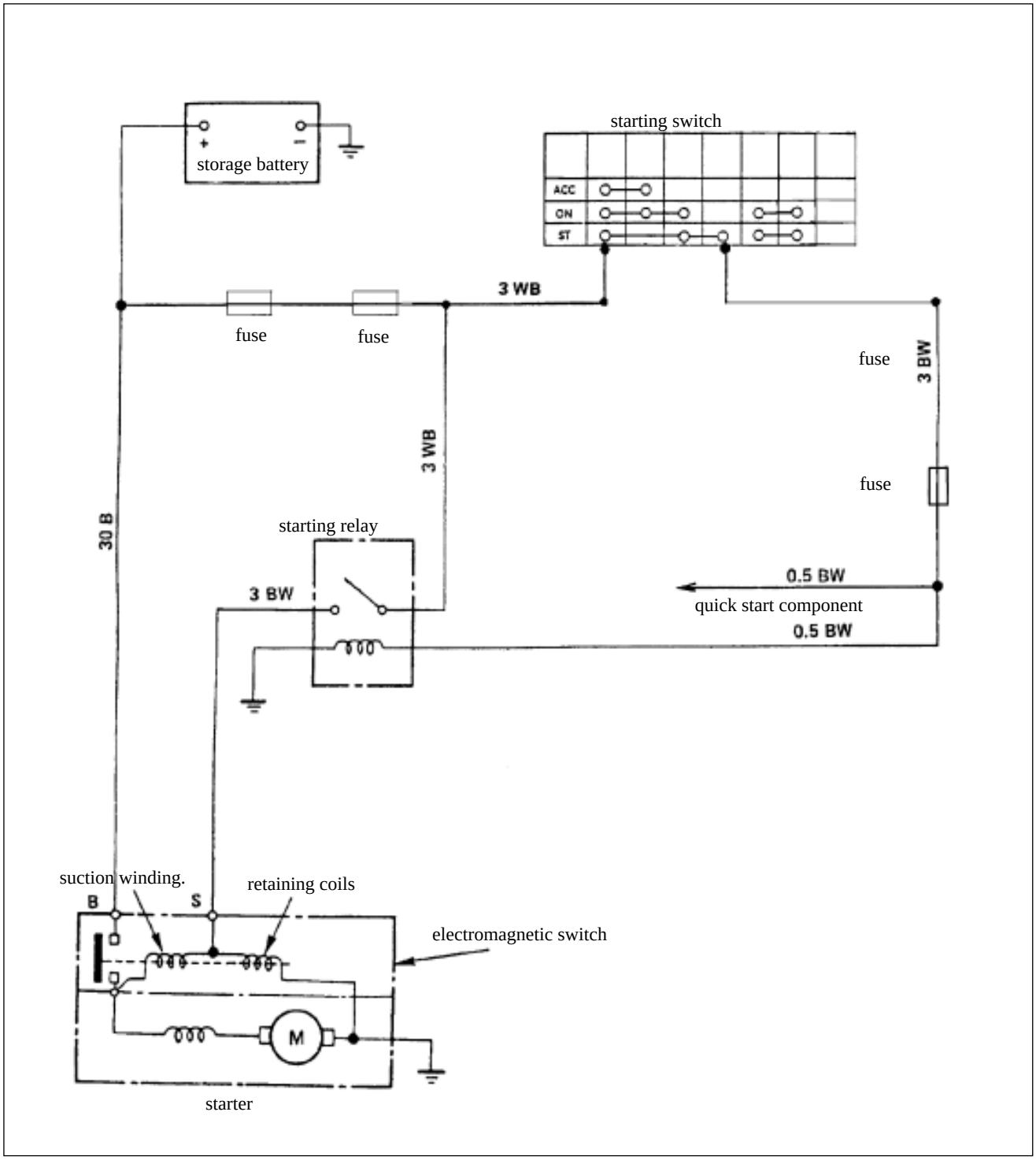

Service on the vehicle

Starter

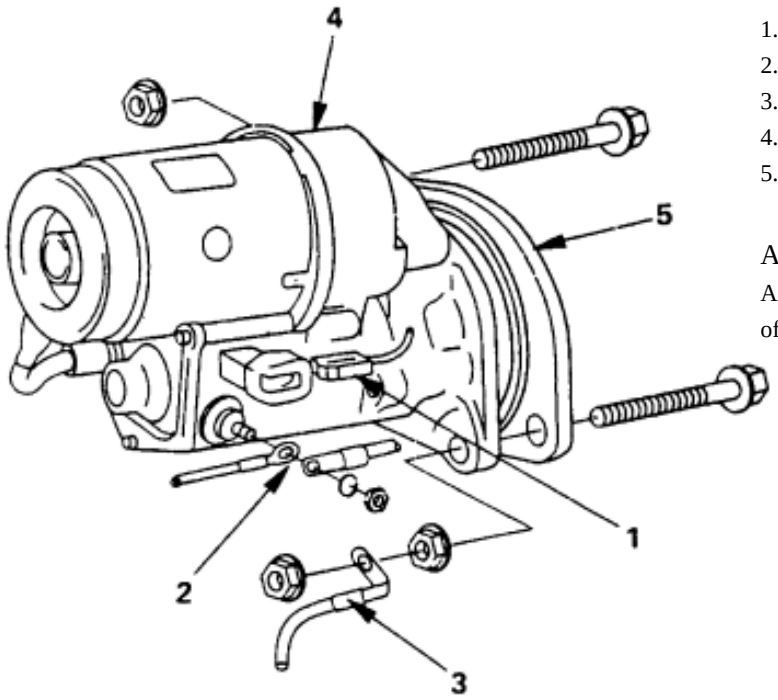

Disassembly procedure

1.“50” wiring terminal
2.“30” wiring terminal
3. earthing cable wire terminal
4. engine assembly
5. isolation board (cold area excluded)

Assembly procedure

Assemble according to the reverse procedure of disassembly.

Disassembly

Preparations

Disconnecting the grounded cable of storage battery

1. “50” terminal post
2. “30” terminal post
3. Earth wire cable post
4. Starting motor assembly
5. Separation plates(Cold regions except)

Assembling

1. Separation plates(Cold regions except)
2. Starting motor assembly

   Screw tight fixed bolts and nut to the provided torque

   Screwing torque: 81N.m
3. Earth wire cable post

   Connect the grounded cable of storage battery
4. “50” terminal post

   Connect wire connectors
5. “30” terminal post

   Connect earth wire cable post of storage battery to the wire Connector of the starting switch, then screw tight fixed nut to the provided torque.

Screwing torque: 81N • m

Connect the grounded cable of storage battery

Single piece maintenance

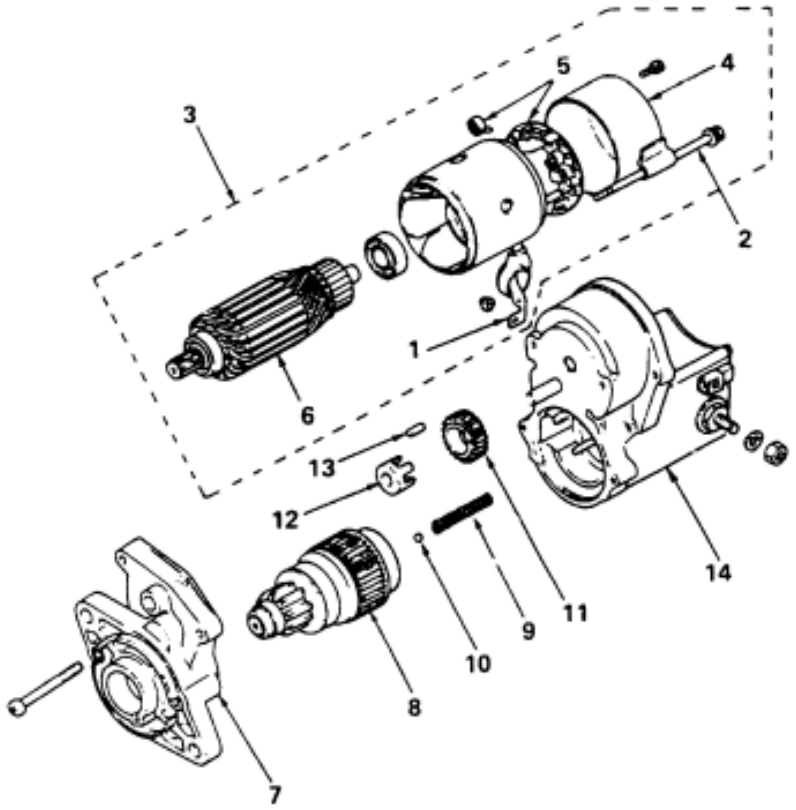

Discomposition sequence

1. lead wire
2. through bolt
3. yoke assembly
4. yoke cover
5. carbon brush and Carbon brush holder
6. armature
7. driving box
8. overriding clutch
9. return spring
10. steel ball
11. pinion
12. holder
13. roller
14. magnetic switch.

Reassembly sequence

Reassembly according to the reserve order of discomposition.

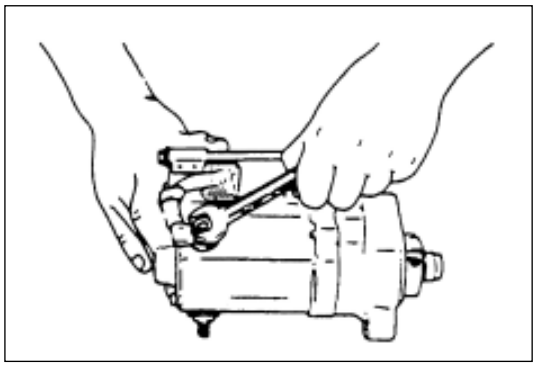

Decomposition

1. Lead wire

   Remove the wire from the magnetic switch.

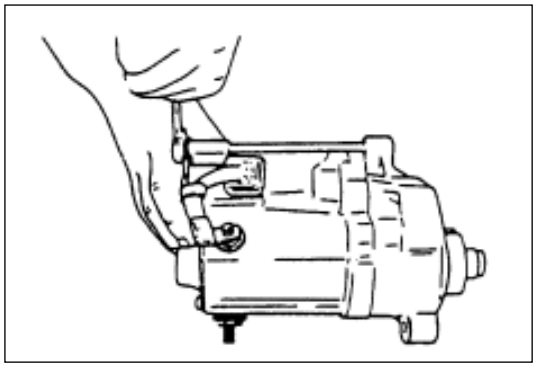

2. Through bolt

   Remove the through bolt from the yoke.

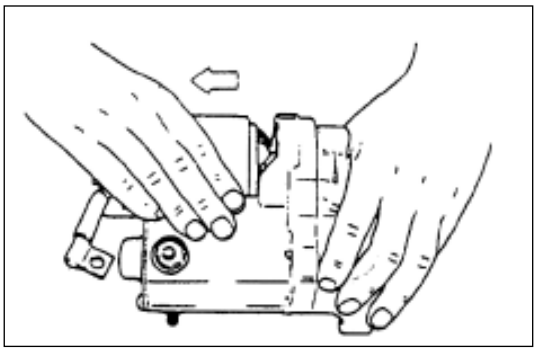

3. Yoke assembly
   Separating the yoke from magnetic switch

4. Yoke cover

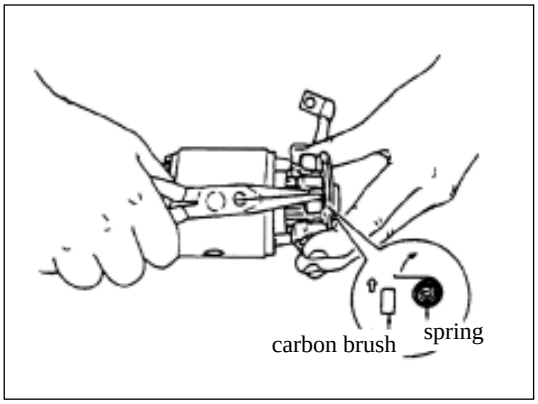

5. Carbon brush and Carbon brush holder
   Disassemble the brush and the holder from armature with shaft-mouth plier

6. Armature

7. Driving box

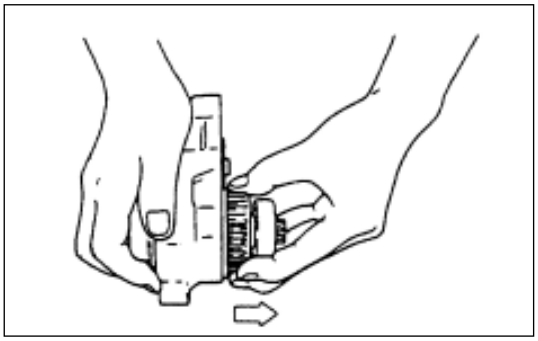

8. Overriding clutch
   Disassemble the overriding clutch from the box.

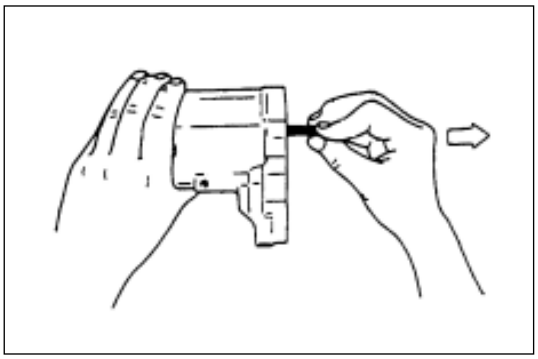

9. Return spring
   Disassemble the return spring from the magnetic switch

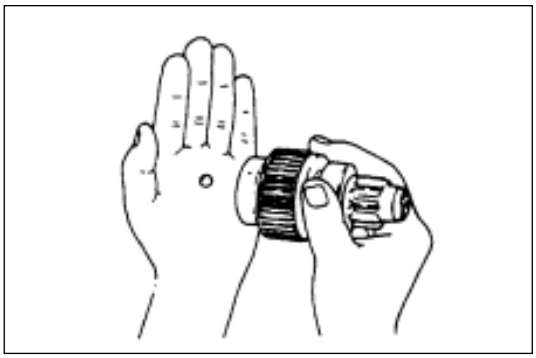

10. Steel ball
    Disassemble the steel ball from the overriding clutch

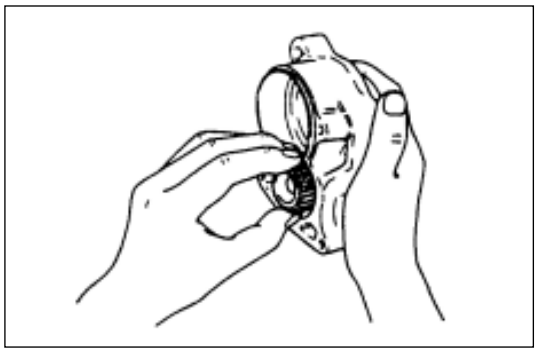

11. Pinion

Disassemble the pinion from the box

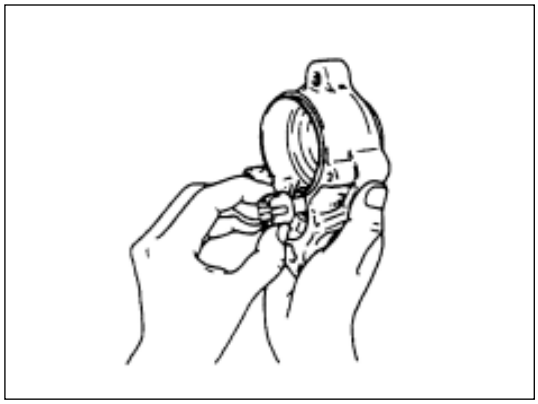

12. Holder

Disassemble the holder from the box

13. Roller

14. Magnetic switch.

Checking and repairing

If find abrasion, destroyed or any other unusual conditions in the checking, then need to repair or replace parts.

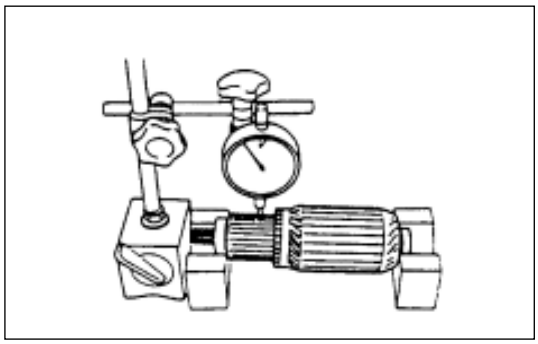

Armature

(a) Checking the quantity of radial runout of ring header, if it exceeds the provide limit, and then need to replace the ring header.

Quantity of radial runout mm

Output(kw)	Standard	Limit
2.8	0.02	0.05

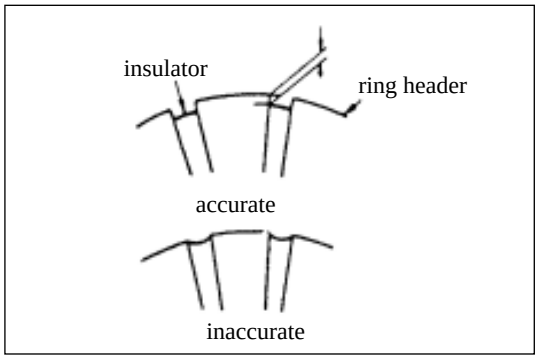

(b) Check the mica is worn or not.

Depth of mica mm

Output(kw)	Standard	Limit
2.8	0.70-0.90	0.20

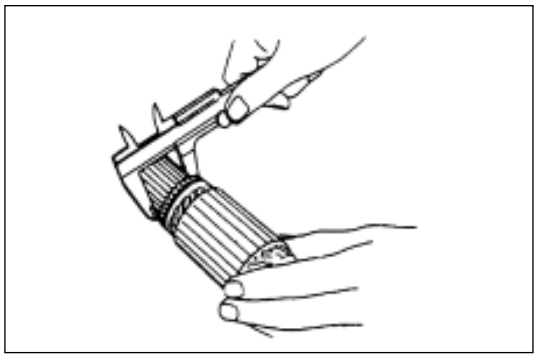

(c) Check the outer diameter of ring header.

Outer diameter of ring header mm

Output(kw)	Standard	Limit
2.8	35.00	34.00

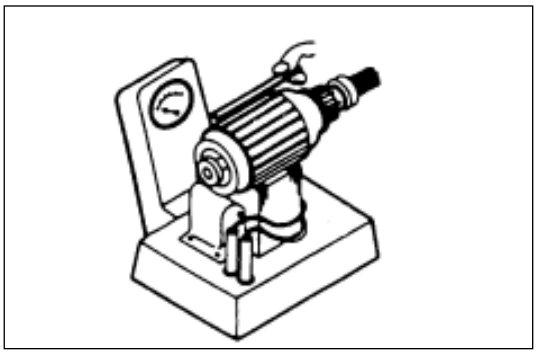

Armature short-circuited test

Put the armature in the short-circuited test meter to check if it is short-circuited.

When rotate the armature slowly, make the saw blade touch the armature core ,short-circuited armature makes the saw blade oscillating and attracted by core .if so , it indicates that armature has been short-circuited ,must be replaced.

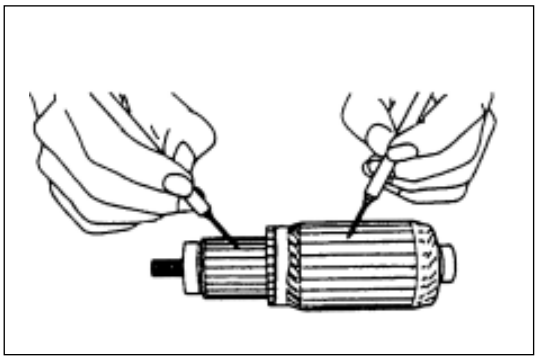

Armature earth connection test

Connect one probe of the multimeter to the ring header; the other to the armature core, the result will turn to be open-circuited. If closed-circuited, it means that armature has connected to earth. Replace the armature.

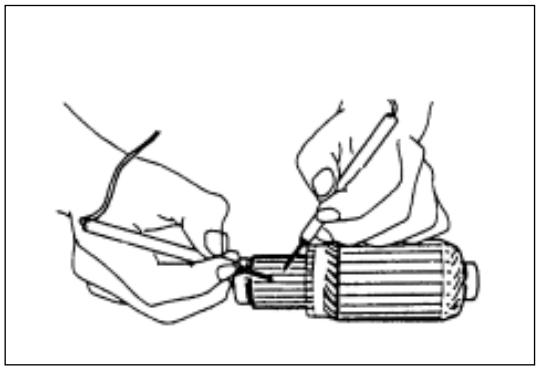

Armature closed test

Connect both of the multimeterís probes to the ring header it must be closed-circuited on any test point .open-circuited, replace the armature.

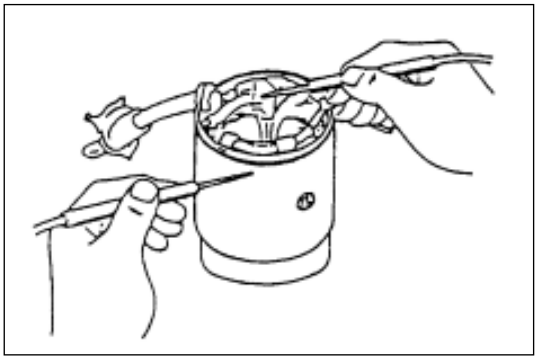

Yoke

Magnetic winding earth connection test

Connect one probe of the multimeter to the magnetic winding connector or brush, the other to the outside surface of the yoke. The result will turn to be open-circuited .if the multimeter shows closed, it means the magnetic winding has connected to earth, replace the unit yoke.

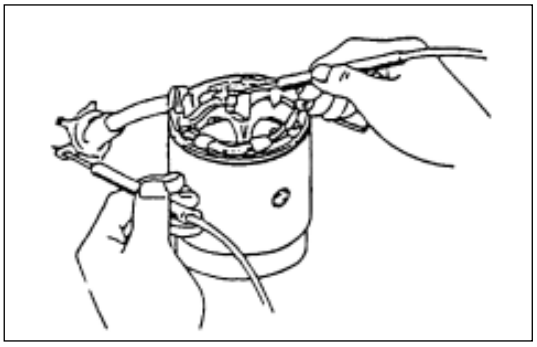

Magnetic winding closed-circuited test

Connect one probe of multimeter to the terminal connector “C”, the other to the brush; the result will turn to be closed-circuited. If open-circuited, then replace unit yoke.

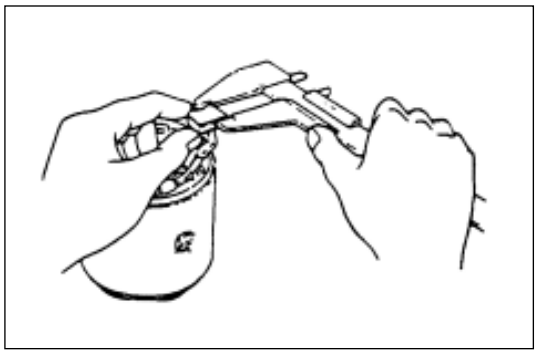

Carbon brush and carbon brush holder

Measure the length of the carbon brush, if the abrasion exceeds the using limit, then the carbon brush should be replaced.

Length of carbon brush mm

Output(kw)	Standard	Limit
2.8	14.5	10

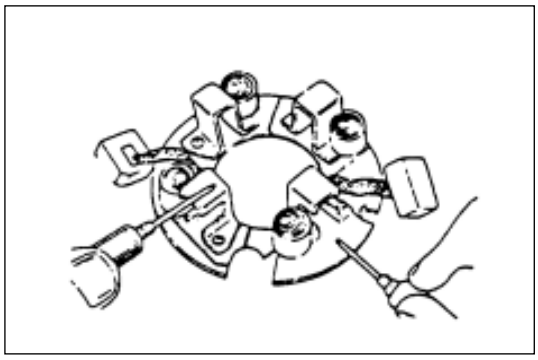

Insulation experiment of the carbon brush holder

Check the carbon brush holder is insulated with the Multimeter. Put one of the probe on the board of the brush holder, the other touches the positive of the brush holder.

The result will turn to be open-circuited.

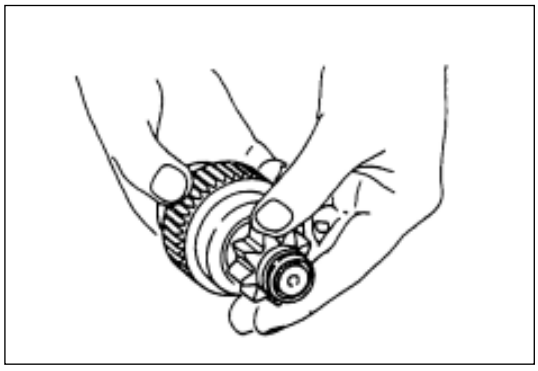

Overriding clutch

Check the tooth of the pinion is worn or destroyed, if destroyed, then new one instead. When make the pinion rotating clockwise, it should be rotating freely. If anticlockwise, the pinion will be locked up.

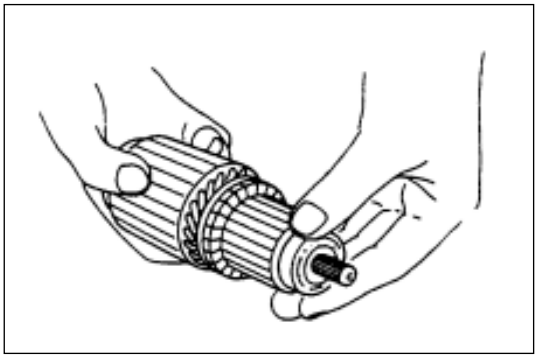

Bearing

Check the bearing is worn or destroyed, if noise is produced when the bearing is in operation, the bearing will be replaced.

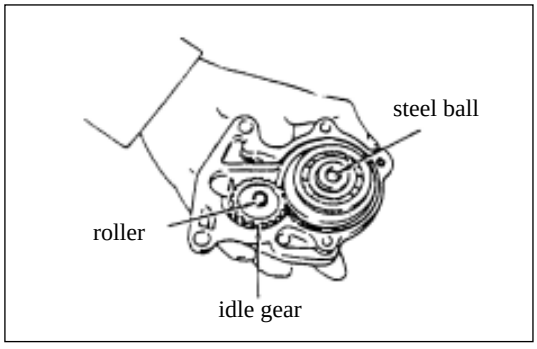

Reassembling

Reassembling sequence is inverse the sequence of decomposition. Notice the following:

- Magnetic switch
- Idle gear
- Clutch assembly
- Box

(a) Unit clutch is fitted on the magnetic switch.

(b) Fix gear and box.

Note:

Do not forget to mount the ball and spring between clutch and magnetic switch. Before this, mount the roller on the pinion.

Magnetic switch

Link the magnetic switch between clutch and box temporarily then do the following experiments. Each experiment must be completed in 3 to 5 seconds.

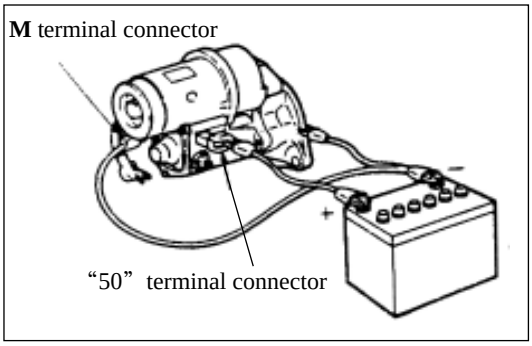

1. Combine force of pull and push test

Connect the negative terminal connector of storage battery to shell and M .When the current runs from positive of the story battery to the terminal connector 50, pinion will shift.

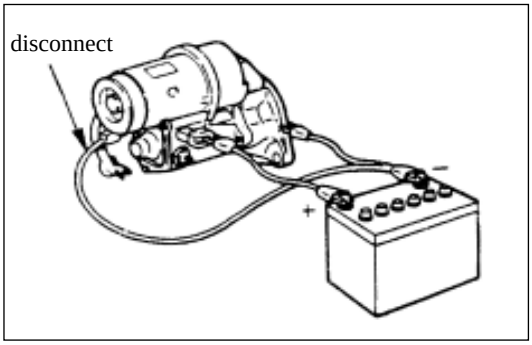

2. Holding test

Cut off the wire of M ,the pinion keeps shifting.

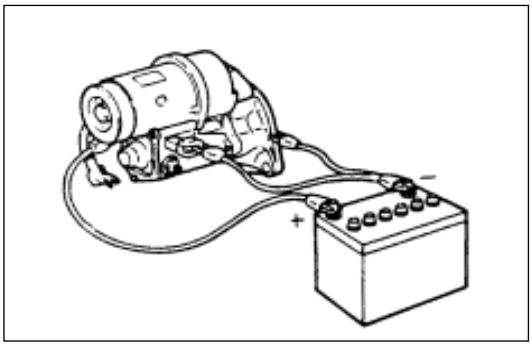

3. Return test

Connect the negative terminal connector of the storage battery to terminal connector 50 and shell, the positive terminal connector of the storage battery to M, the pinion will be wobbling. When cut off the wire which is connected to“50”, the pinion returns to the position before its shifting immediately.

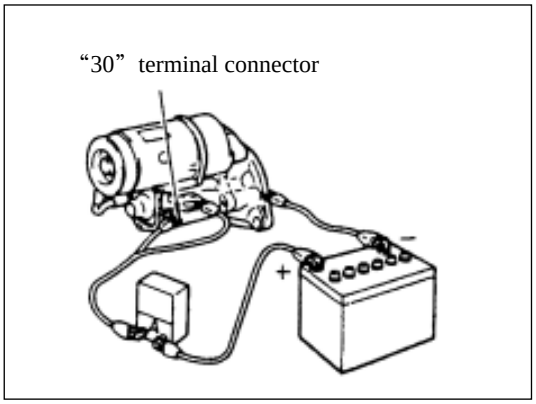

4. Current

As the figure shows, Connect the positive pole of the storage battery to the amperometerës positive pole, the negative pole to the body, amperometerës negative pole to the terminal connectors of 30 and 50.then measure the value of current. Standard value will be 120A or less.

Note:

The storage battery must be full-charged. Wide wire should be used, because big current will go through it.

terminal connector

Charging appliance

Page

General

Electric generator

14V-50A

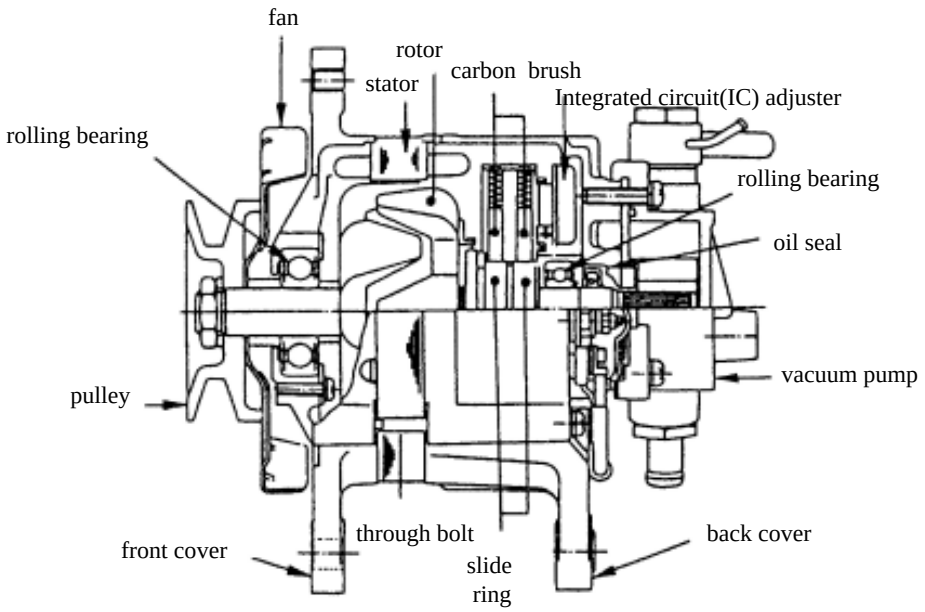

The charging appliance is of integrated circuit (IC) universe adjuster type. Main parts shall be connected according to the line diagram shown in the figure.The adjuster is not a solid circuit. It is assembled together with carbon brush bracket in the motor and assembled on the back end cover.

The electric generator need no special maintenance as voltage adjuster.there are nine diodes in the rectifier connected with the stator coils in order to convert AC voltage to DCThe DC voltage will be rectified and then be fed to the output terminals of electric generator.

Charging circuit

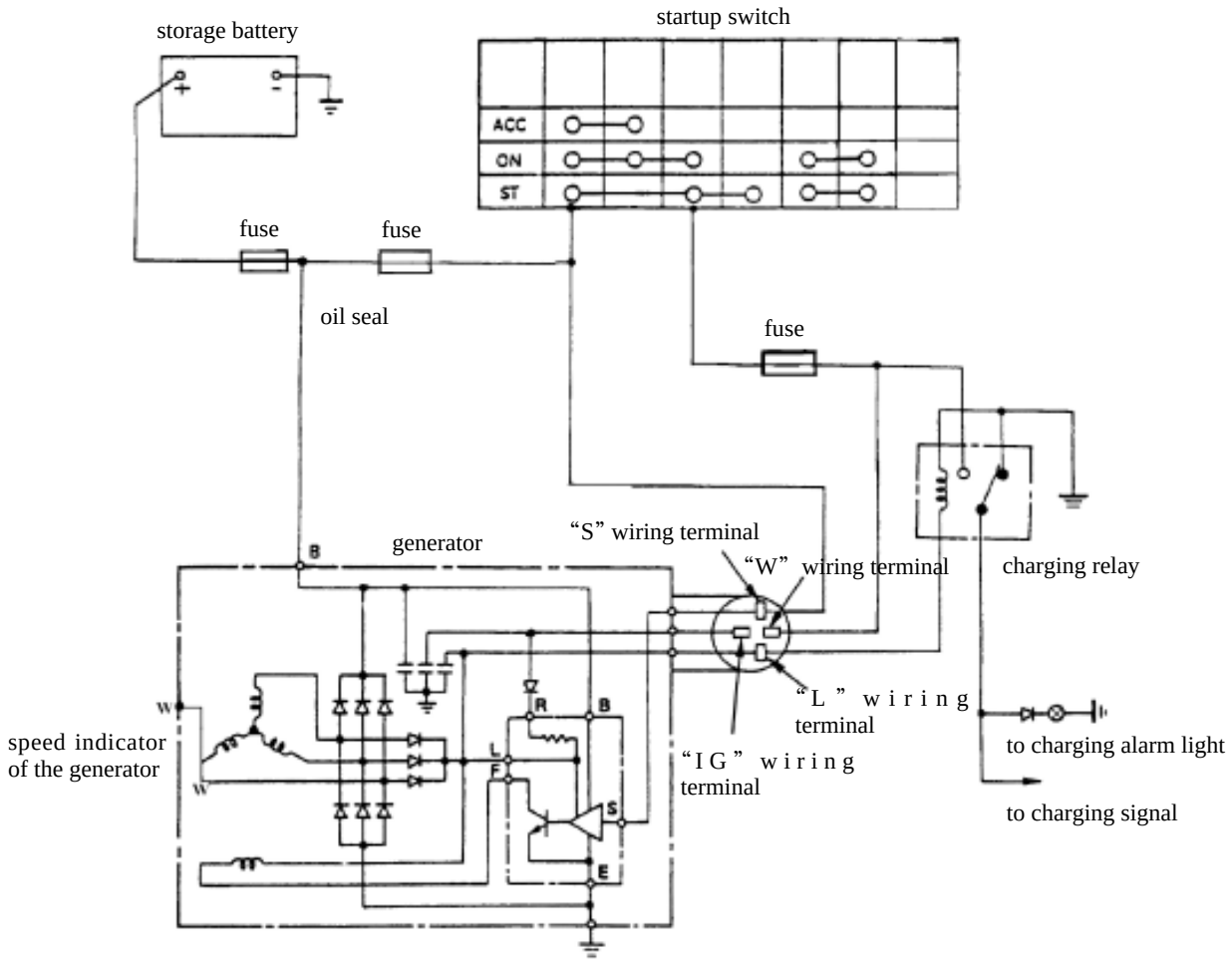

Diagnosis

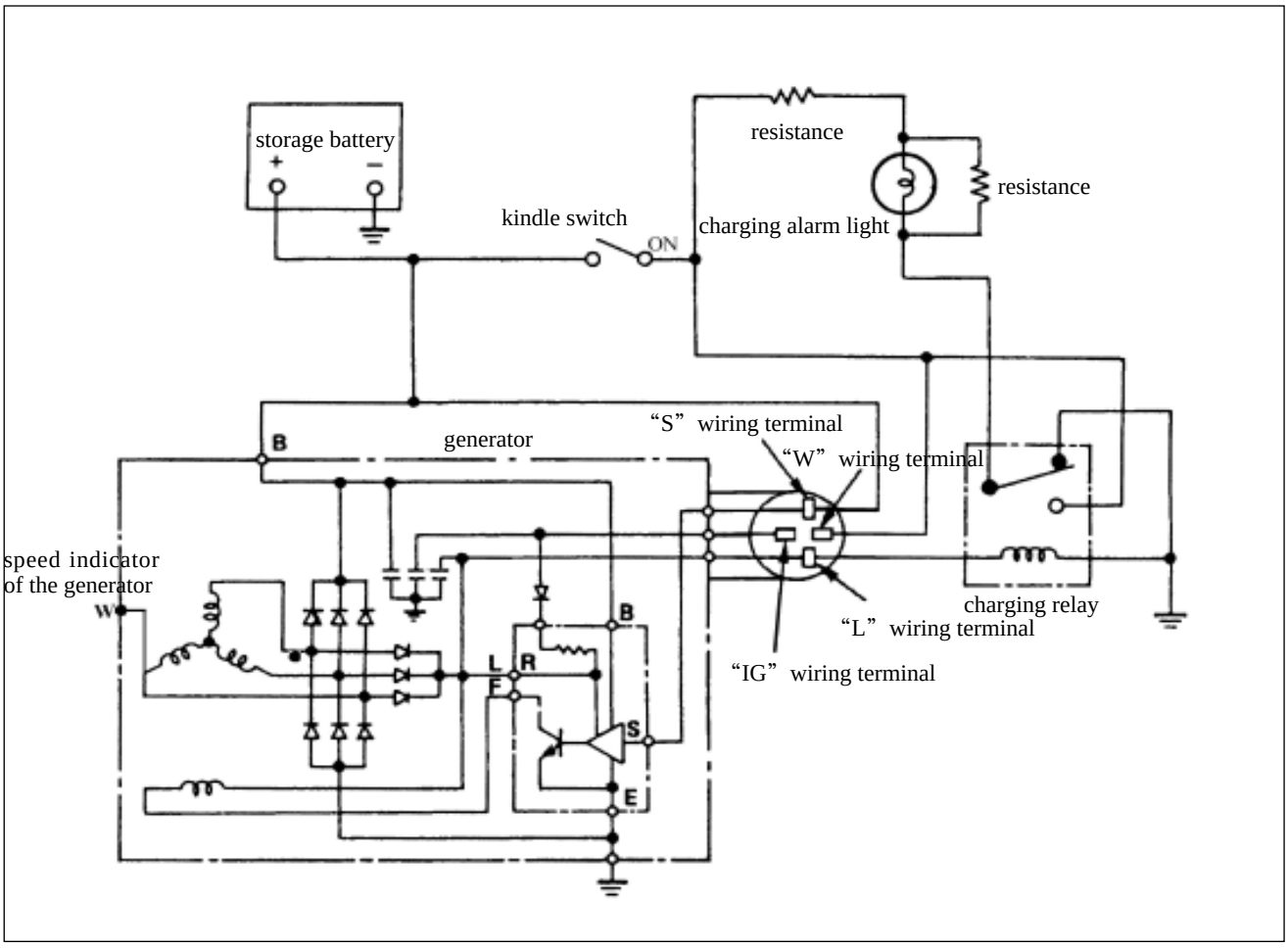

On-vehicle comprehensive inspection

The operating condition of the charging appliance is indicated with the charging alarm light.when the starting switch is turned to ìcloseî position, the alarm light will be on.when the engine starts, the charging system operates properly if the alarm light off.If the alarm light shows abnormal or you doubt about insufficient or excess charging of battery, the following inspection shall be carried out for the charging system.

1. Visual examination of belt and lead socket joint.
2. When the engine is stop, turn the starting switch to "close" position and examine the state of alarm light.

- If the alarm light is not on
  Disconnect the lead socket joint from the engine, and earth The "L" terminals on the socket joint.
- If the alarm light is on
  Repair or replace the electric generator.

On vihicle maintenance

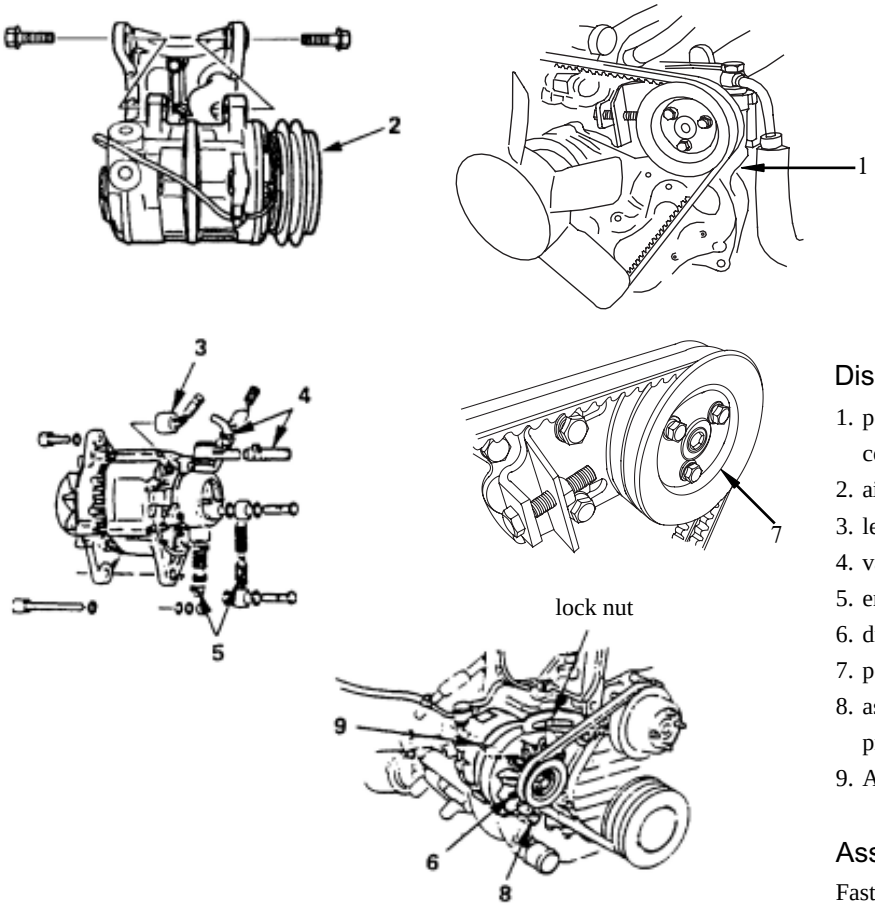

Disassembly procedure

1. power steering pump and air conditioning compressor
2. air conditioning compressor assembly
3. lead socket joint
4. vacuum hose
5. engine oil hose
6. driving belt of AC electric generator
7. power steering pump assembly
8. assemble according to the reverse procedure of disassembly
9. AC electric generator assembly

Assembly procedure

Fastening bolts of AC generator

Disassembly

Preparation

Disconnect the earthing cable of storage battery.

1. belts of power steering pump and air conditioning compressor

   Loose the bolts of power steering pump belt and dismount the driving belt.

2. air conditioning compressor assembly

   (a) Disconnect lead socket joint of the clutch.

   (b) Dismount the bolts of air conditioning compressor,Remove the air conditioning compressor assembly.

3. Lead socket joint

   (a) Disconnect the terminals ìLî, ìSî, ìWî and ìIGî.

   (b) Disconnect the terminal ìBî.

4. Vacuum hose

   Remove the vacuum hose from the vacuum pump of the electric generator.

5. Engine oil hose

   remove the engine oil hose ① from the bottom case.

   remove the engine oil hose ② from the body.

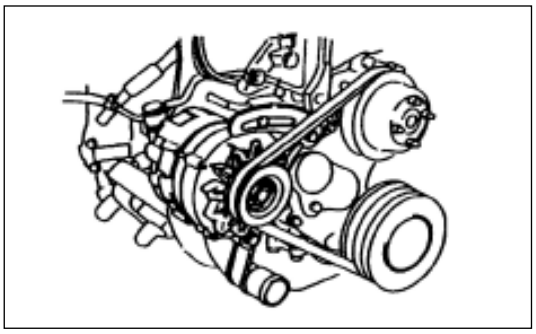

6. Driving belt of AC electric generato
   (a) Loose the fastening bolts of adjusting plate.
   (b) Dismount adjusting bolts.
   (c) Loose the fastening bolts of AC electric generator and dismount the driving belt.

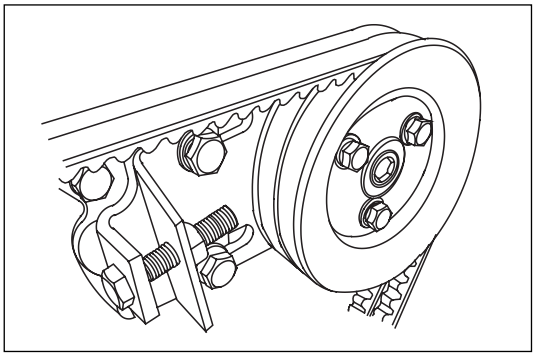

7. Power steering pump assembly
   (a) Loose the adjusting bolts and dismount the driving belt.
   (b) Dismount the bolts of power steering pump, remove the power steering pump assembly.
8. Fastening bolts of AC generator
9. AC electric generator assembly

   Disassemble the AC electric generator assembly from the engine.

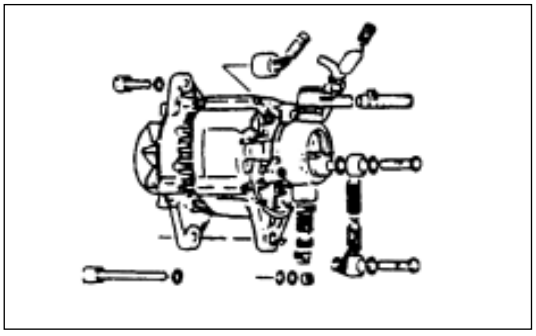

Assembly

1. AC electric generator assembly

   Installation of AC electric generator assembly
2. fastening bolts of AC generator

   Temporarily mount fastening bolts of AC generator

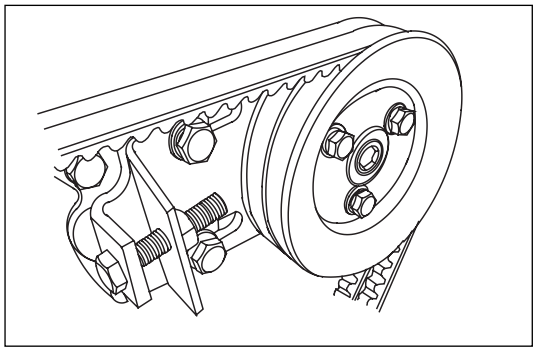

3. Power steering pump assembly
   (a) Mount the power steering pump assembly and screw down the fastening bolts to prescribed torque.

   Tighten torque: 19N • m
   (b) Connect the feed and return oil hose of the power steering pump and fasten them with clips.

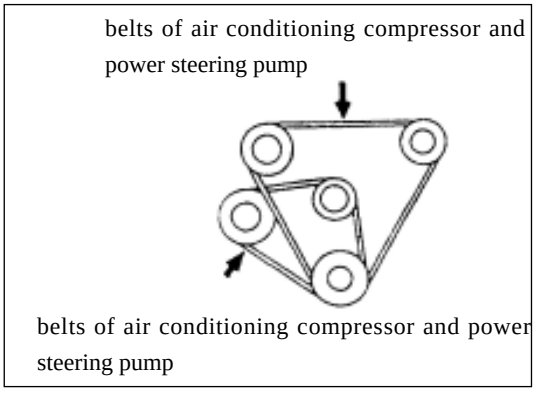

Driving belt of AC electric generator

Mount the driving belt of AC generator and adjust its tensity.

Press the middle of the driving belt with 98N force.

Driving belt deflection: (8-12)mm.

Mount the fastening bolts and screw down to prescribed torque.

Screw down torque of electric generator fastening bolt is: 25N • m

Screw down torque of adjusting plate fastening bolt is: 19N • m

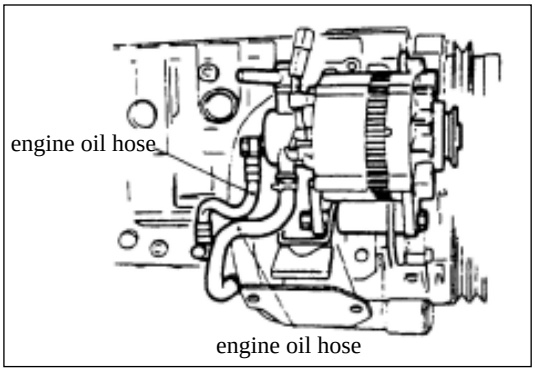

5. Engine oil hose
   (a) Mount the engine oil hose ① onto the bottom case.
   (b) Mount the engine oil hose ② onto the body

6. Vacuum hose
   Mount the vacuum hose to the vacuum pump of the electric generator.
7. Lead socket joint
   Connect the terminals "L", "S", "W", "IG" and "B".

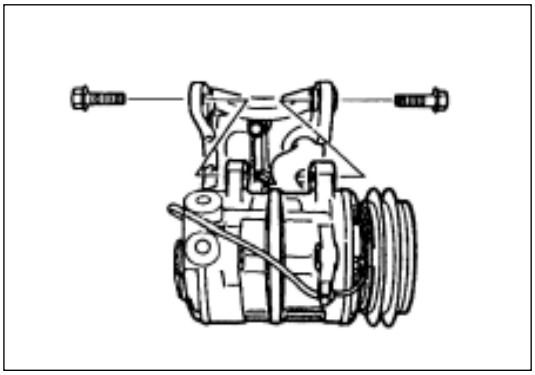

8. Air conditioning compressor assembly
   (a) Mount the air conditioning compressor assembly and screw down the fastening bolts to prescribed torque.
   Tighten torque: 19N • m
   (b) Connect lead socket joint of the magnetic switch.

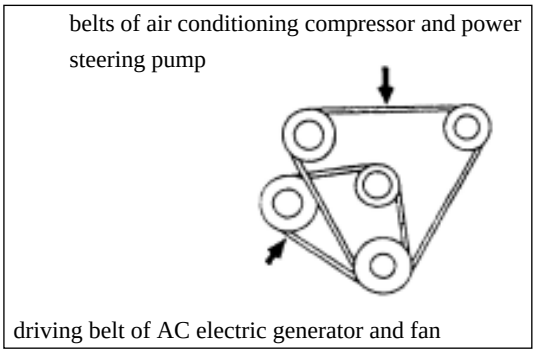

9. Belts of power steering pump and air conditioning compressor
   (a) Mount the driving belt and adjust its tensity.
   (b) Press the middle of the driving belt with 98N force.
   Driving belt deflection: (8-12)mm.
   (c) Connect the ground cable of storage battery.

Single piece maintenance

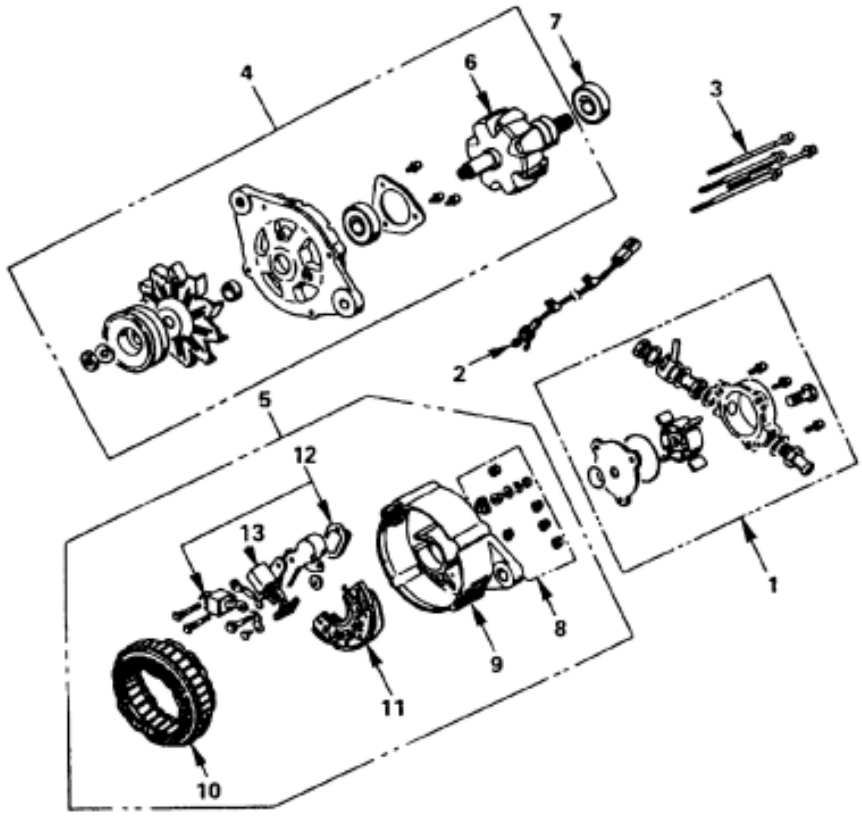

Disassembly procedure

1. vacuum pump
2. lead
3. through bolt
4. rotor and front cover assembly
5. stator and back cover assembly
6. rotor
7. back bearing
8. terminal bolts and nuts
9. back cover
10. stator
11. diode
12. integrated circuit (IC) adjuster
13. carbon brush bracket

Reassembly procedure

Reassemble according to the reverse procedure of disassembly.

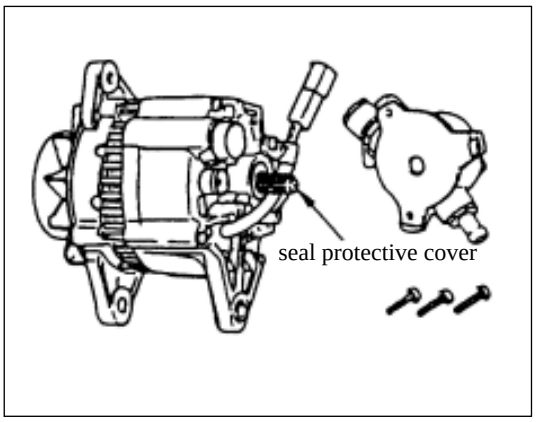

Disassembly

1. Vacuum pump
   (a) Drain liquid from the exit.
   (b) Dismount the fastening bolts of vacuum pump.
   Hold center plate and disassembly the vacuum pump horizontally along the rotor axis.
   single piece maintenance disassembly

2. Lead
3. Through bolt

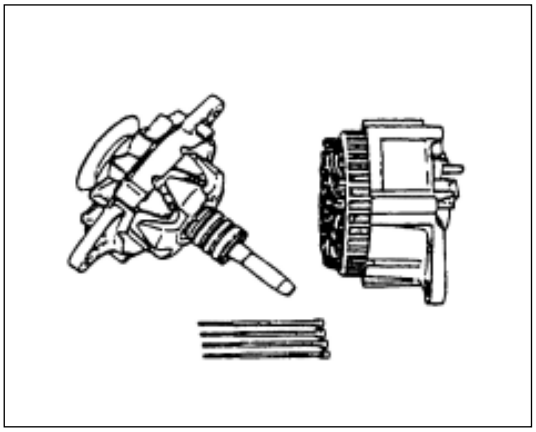

4. Rotor and front cover assembly
5. Stator and back cover assembly
   Insert the screwdriver into the space between the front cover and stator core, dismount the assembly.
   Attention:
   Pay attention not to damage the stator core when using screwdriver.
   When the assembly can not be dismounted, fasten the back cover and slowly knock the axis end face with plastic hammer.

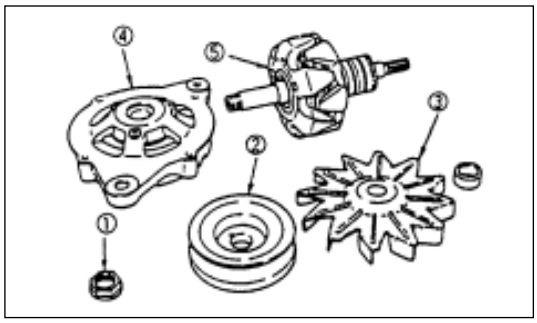

6. Rotor

Grip the rotor with nip, dismount belt nut ①, remove the pulley ②, fan ③, front cover ④ and the rotor ⑤.

7. Back bearing
8. Terminal bolts and nuts

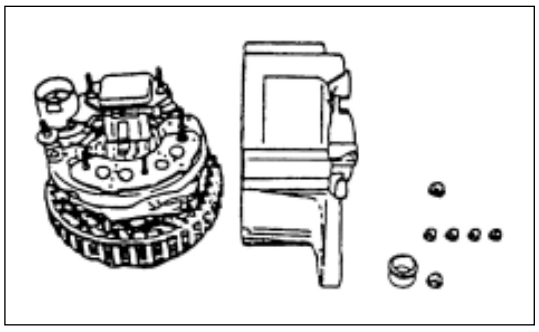

9. Back cover
   (a) Dismount the nuts fastening B terminal and diode.
   (b) Separate stator and back cover.Pay attention to the location of insulating spacer so that they can be mounted to their original location when reassembly.

10. Stator

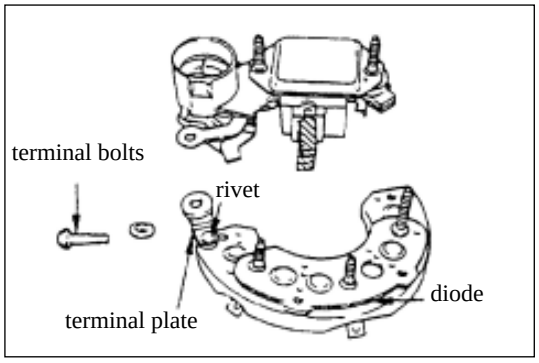

11. Diode

Melt and remove the solder on stator core and diode, dismount the diode from the stator.Grip the leads when melting the solder to prevent heat from transferring to the diode.

12. Integrated circuit (IC) adjuster

melt the solder on the support bracket of IC adjuster, separate the IC adjuster and diode, then remove the nuts.

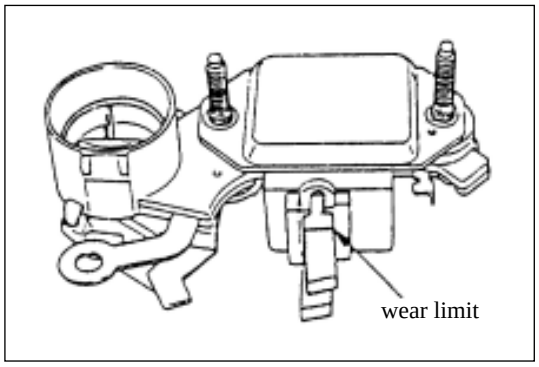

13. Carbon brush bracket
   (a) Dismount fine-pitch screw and melt solder on the IC adjuster.
   (b) Fine-pitch screws shall be dismounted only when replacing carbon brush or capacitance, otherwise, do not dismount fine-pitch screws.
   (c) Aassemble according to the reverse procedure of disassembly.

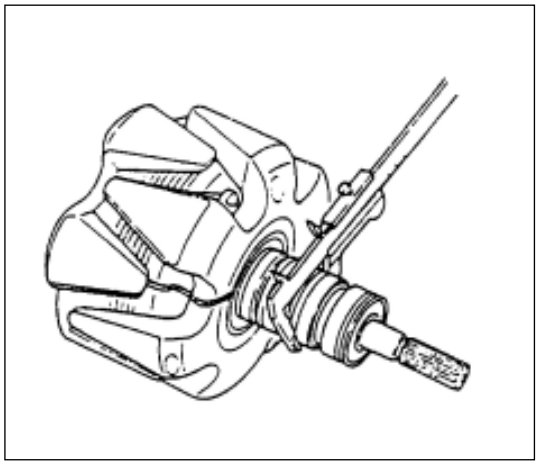

Inspection and maintenance

Parts must be repaired or replaced when excess wear or damage is found in examination.

Rotor

(a) Examine if there is any pollution or roughness on the rotor slide ring surface.Polish the rough part (if any) with 500# to 600# sand paper.

(b) Measure the diameter of slide ring, replace it if the diameter surpasses limit. mm

Standarrd	limit
34.6	33.6

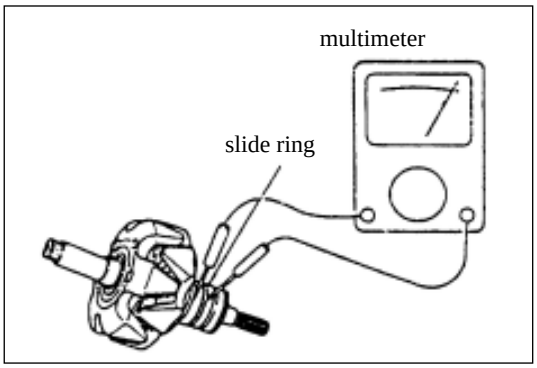

(c) Examine if the circuit between the slide rings is closed, replace them if circuit is open.

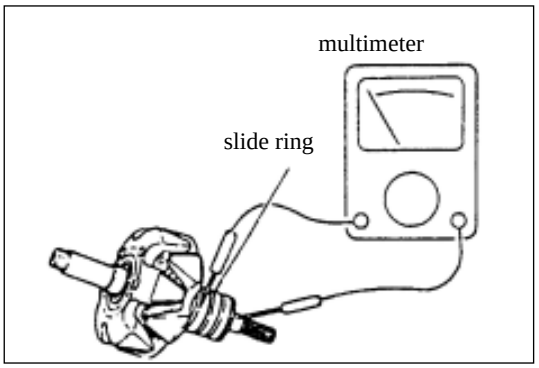

(d) Examine if the circuit between the slide ring and rotor iron core or rotor axis is closed.
If the circuit is closed, replace the rotor assembly.

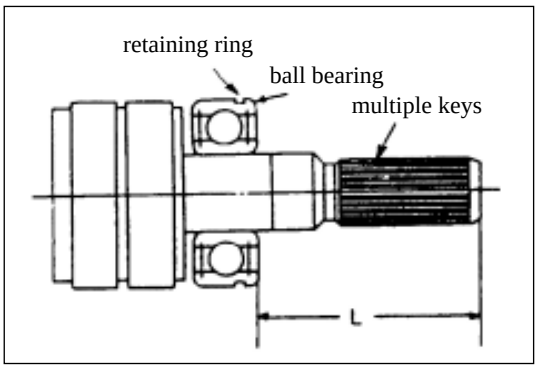

Back rolling bearing

(a) Examine if the rolling bearing can run properly without nois.When the rolling bearing can not run properly or noise can be heard, the rolling bearing must be replaced with a new one.

(b) When mount the bearing, snap ring must be pressed in together with the bearing. The snap ring shall face the spline end.
The press-in distance of the bearing is 41.8 to 42.0mm

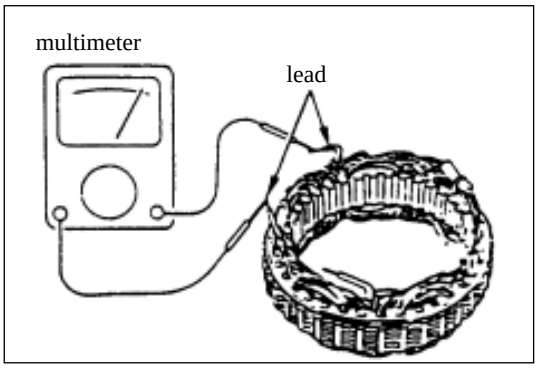

Stator core

(a) Examine if the circuit between every phase is closed.If the circuit is open, replace the stator.

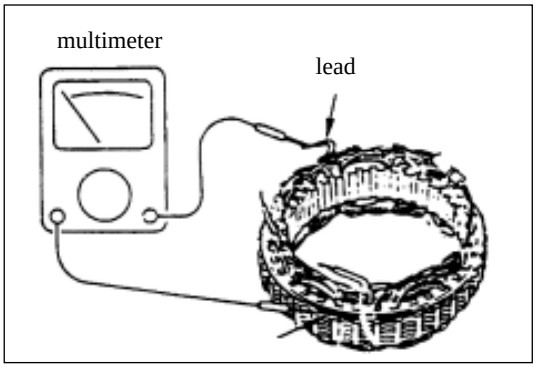

(b) Examine if the circuit between stator winding and stator iron core is closed.The winding shall be replaced when the circuit is closed.

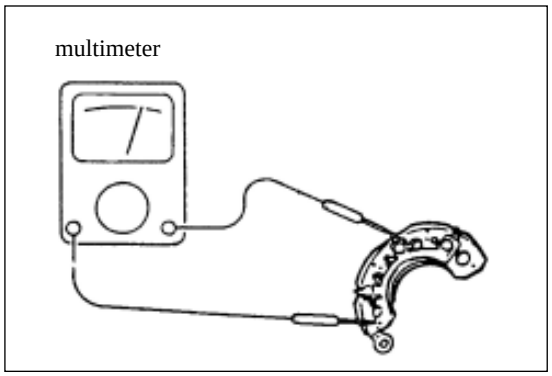

Diode

(a) Examine if the circuit between terminals (for example: BAT and U) is closed.If the circuit is closed, that means the diode is ok; if the circuit is open, that means the diode is unqualified.

(b) Ttest with reverse polarity.if the circuit is closed in every point, it means the diode is unqualified and shall be replaced.Auxiliary diode has no terminals, so circuit test always is carried out between the two ends of the diode.

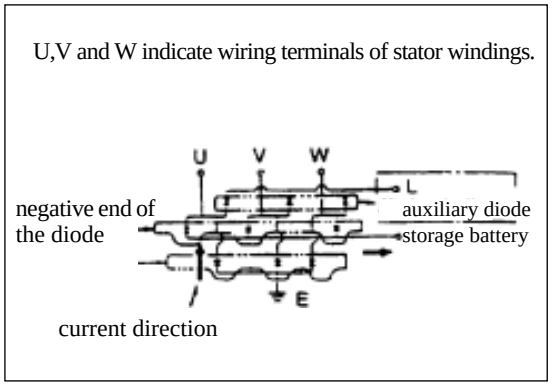

Examination of diode negative end

Connecting terminal		The positive end of the diode	
	The probe of themuitimeter	Postive end	Neggative end
U.V.W	positive end		Open circuit
	Negative	Close circuit	

Examination of diode negative end

Connecting terminal		The negative end of the diode	
	The probe of the muitimeter	Postive end	Neggative end
U.V.W	positive end		Open circuit
	Negative	Close circuit	

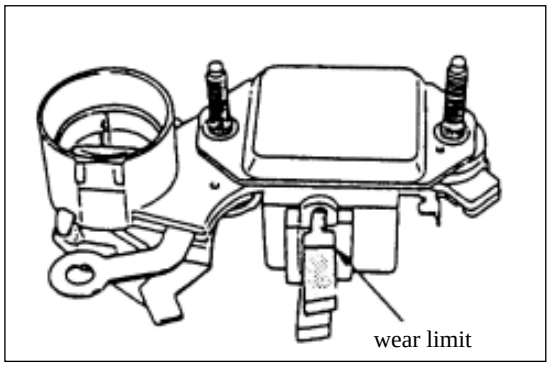

Carbion brush

Measure the length of the carbon brush.

Length of the carbon brush（L） mm

Standard	Limit
20	16

The horizontal line on the carbon brush indicates its usage limit.

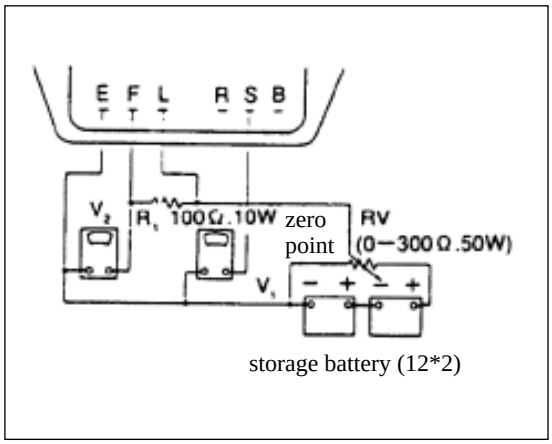

Ingegrate circuit adjuster

Needs measurement appliances

Connect the instrument appliances as shown in the diagram and carried out the following measurements.

V_1 is the voltage on BAT1 V

Standard	10-13

V_2 is the voltage on F-E V

Standard	Limit
⩽ 2	⩾ 2

Disconnect the terminal “S” to measure.

V_3 is the votage on BAT1-BAT2 V

Standard	20-26

• Storage battery (12V*2) V3 is the voltage between BAT1 and BAT2. Measure the voltage when gradually changes the resistance value from zero with the variable resistor. voltage between E and Fand then examine if the voltage increases from 2V to 10 to 13V.

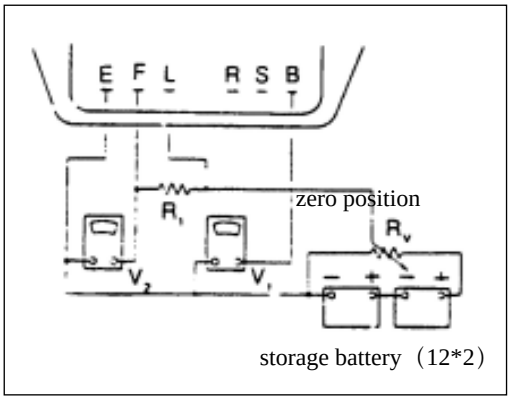

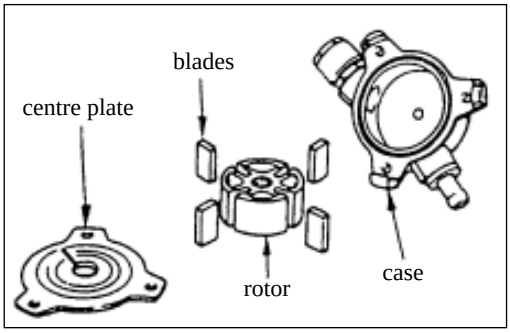

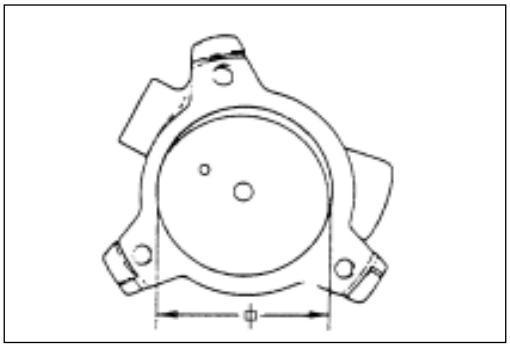

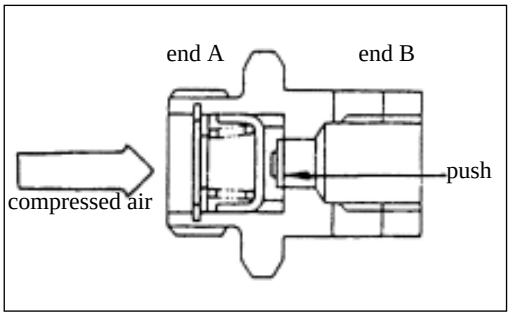

The adjuster shall be replaced if the voltage breaks in any point. V4 is the voltage between middle tap of variable resistor and terminal "E" when the resistance value of the resistor not changed.

standard votage at 20℃	14.0-14.9

The adjuster shall be replaced when the measuring value deviates from standard value.

(b) Connect the instrument appliances as shown in the diagram and examine the following items.

- Measure the voltage between terminals B and E with the variable resistor gradually increasing voltage.Examine if the voltage increases from 2V to 10 to 13V.If the voltage does not change, it means the adjuster is unqualified and shall be replaced.
- Measure the voltage between middle tap of variable resistor and terminal "E" when the resistance value of the resistor not changed.

standard votage at 20℃	14.0-14.9

The adjuster shall be replaced when the measuring value deviates from standard value.

Vacuum pump

Visual examination

Examine if there is any wear, damage or other abnormal condition on the vacuum case, blades and check valves.

Vacuum pump disassembly

Center plate, rotor and blades disassembly is mentioned here.

Case

Measure the inner diameter, the case shall be replaced when the measuring value surpasses standard value.

case inner diameter (ϕ) is 57.0 to 57.1mm.

Blades

Measure the length of blades.

length of the blade (L) is 41.8 to 42mm.

Inspection of check valve

(a) Press ìBî end of the check valve with screwdriver and examine if the valve can operate properly.

(b) Lead compressed air of 98 to 490 kPa into "A"end of the check valve and examine if there is any leakage in the check valve.

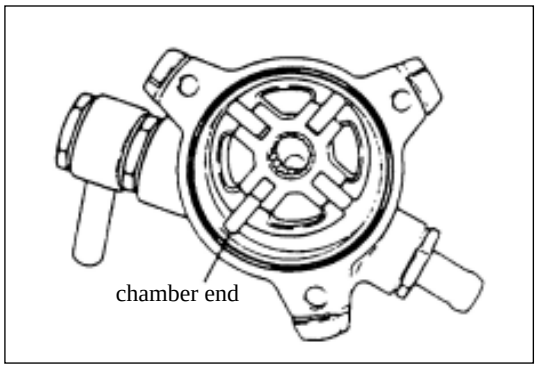

Vacuum pump reassembly

(a) Position the stator on the center plate and the case when the fine-pitch spline upward.Align the holes of center plate and the rotor.

(b) Mount the blade into the slots of rotor.Blade chamfer shall face outward when assembly.

(c) Mount O-ring and center plate.

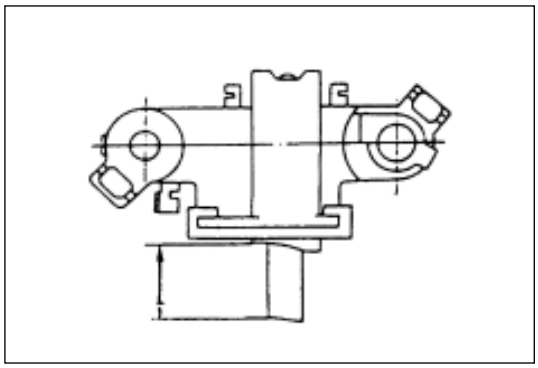

Reassembly

1. Carbon brush bracket assembly

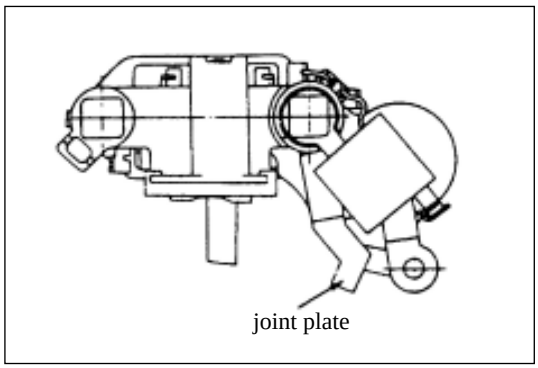

2. Integrated circuit (IC) adjuster assembly

(a) Catch hold of the carbon brush with carbon brush bracket as shown in the diagram and weld the leads.

(b) Put the IC adjuster onto the carbon brush bracket and press into bolts.Insulating pipes and joint plate must be assembled when pressing into bolts.

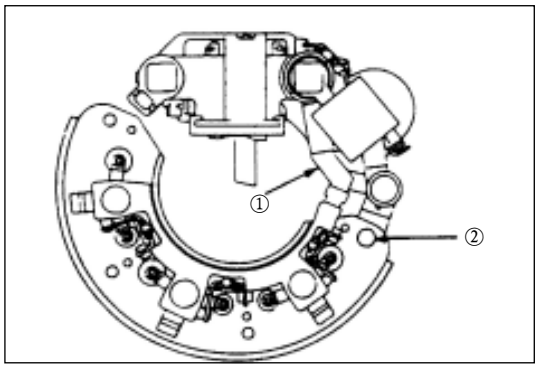

3. Diode

Connect the terminals in the position ① with fastening rivets and weld the terminals in the position ②.

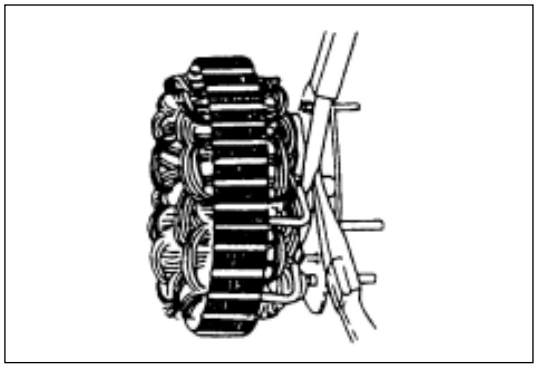

4. Stator

When welding the stator winding and diode leads, bite the diode lead with nipper pliers and finish the job as soon as possible to prevent heat from transferring to the diode.

5. Back cover
6. Terminal bolts and nuts
7. Back bearing

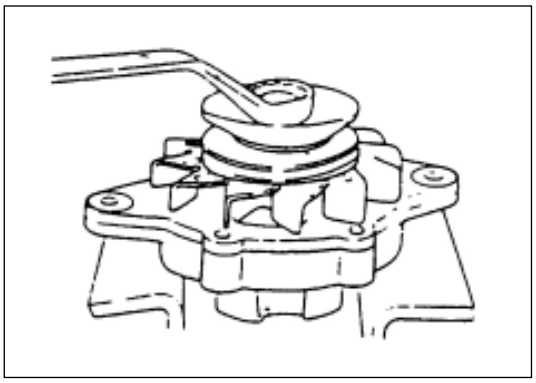

8. Rotor

Wrap nip jaw, clamp the rotor with the nip and screw down pulley nuts to prescribed torque.

Tighten torque: 90N・m

9. Stator and back cover assembly

10. Rotor and front cover assembly

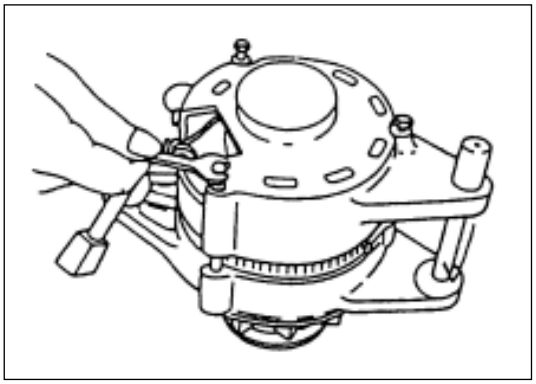

11. Through bolt

(a) Pull he guide bar through front cover and back cover flanges for alignment, and then mount through bolts.

(b) Screw down the through bolts to prescribed torque.

Tighten torque: 35N・m

12. Lead

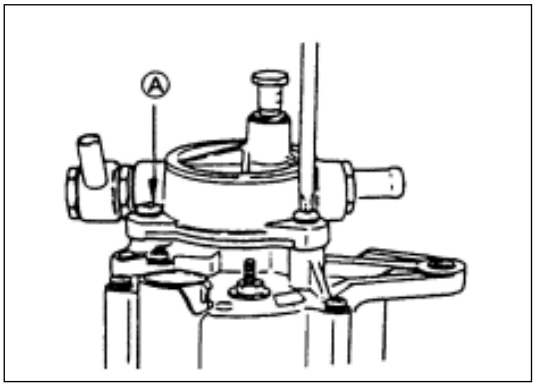

13. Vacuum pump

(a) Mount the case onto the electric generator with three bolts.

(b) Screw down the fastening bolts of vacuum pump to prescribed torque.

Tighten torque: 35N・m

(c) Fill engine oil through oiling port (about 5ml), and then examine if the electric generator pulley can run properly.

brand of the engine oil: Grade CD, GB11122-1997

diesel oil engine oil

Exhaust system

Page

General

Attention:

There must be sufficient distance between exhaust system assembly and car body bottom board to prevent bottom board from overheat and damage to passenger carriage insulation and decorating material.

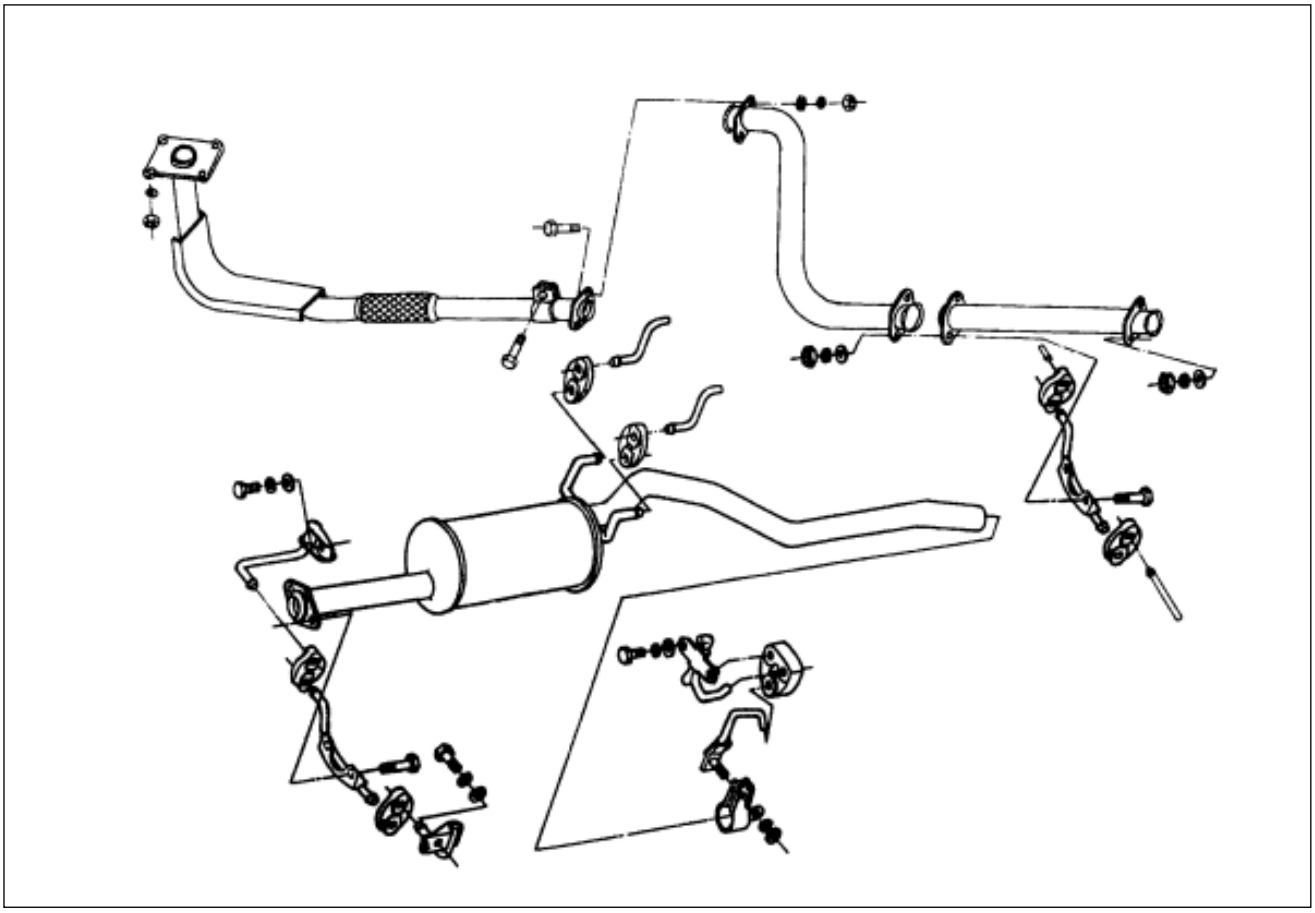

When examine or replace exhaust system assembly, sufficient distance between exhaust system and any part of car body bottom board must be ensured to prevent bottom board from overheat and damage to passenger carriage insulation and decorating material.

Examine if there is any crack, damage, part loss or misplacement in the whole exhaust system, nearby car body surface and back car body cap. Examine if there is any joint disconnection or eyelet, any loose connection or any other damage which may cause exhaust fume leak into back car body or passenger car body. It means so if there is any dust or water in the back car body. Any fault must be eliminated.

On-vehicle repair

Detonation and vibration noise of exhaust system normally are caused by parts misalignment. When adjust the system, unlock all of the bolts and nuts first until all of the parts properly aligned, then tightening all of the bolts and nuts from front to end.

Examination contents:

1. Examine if there is any loosening or damage of joint, especially exhaust fume leakage.
2. Examine if there is any defect, crack or damage of clamp plate and rubber.
3. If any part of catalyzed converter heat shield damaged or if there is any drop pit spreads to the location of catalyzer, it shall be repaired or replace
4. Examine if there is any drop pit, damage or any eyelet, crack caused by corrosion.

Front exhaust pipe

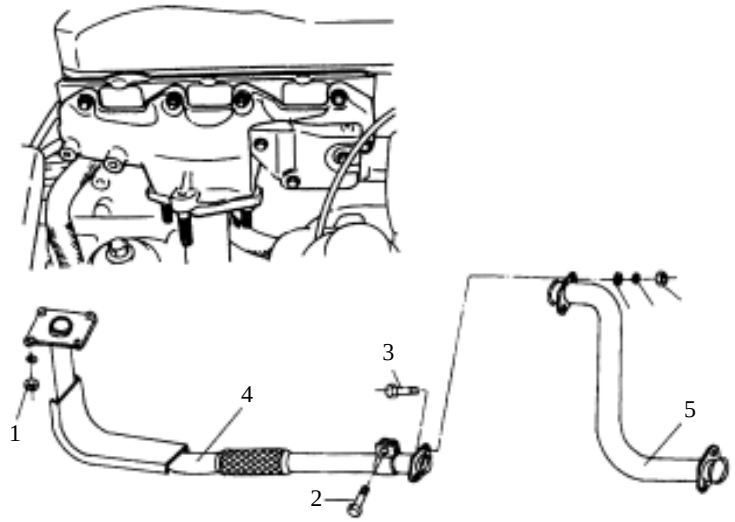

Disassembly procedure

1. tightening nut of front exhaust pipe
2. set bolt of front exhaust pipe installation support
3. set bolt and tightening nut of front exhaust pipe
4. front exhaust pipe
5. elbow pipe

Assembly procedure

Assembly procedure is inverse of disassembly procedure.

Disassembly

Preparations

Disconnect ground cable of the storage battery.

1. Tightening nut of front exhaust pipe

   dismount the two tightening nut from the joint of exhaust manifold and front exhaust pipe.
2. Set bolt of front exhaust pipe installation support
3. Set bolt and tightening nut of front exhaust pipe

   Dismount the two set bolts and tightening nuts from the joint of front exhaust pipe and centre pipe.
4. Front exhaust pipe

   Dismount front exhaust pipe and put it aside.
5. Elbow pipe

Assembly

1. Elbow pipe
2. Front exhaust pipe

   Mount front exhaust pipe onto exhaust manifold.
3. Set bolt and tightening nut of front exhaust pipe

   Tightening set bolts and tightening nuts of front exhaust pipe to specific torque.
4. Set bolt of front exhaust pipe installation support

   Tightening set bolt of support to specific torque.

   Tightening torque is 40N • m
5. Tightening nuts of front exhaust pipe

   (a) Tightening fixed nuts of front exhaust pipe to specific torque.

   Screw torque is 67N • m

   (b) Connect ground cable of the battery.

   (c) Start engine and examine if there is any joint leakage after all parts have been assembled and found in order and no loss.

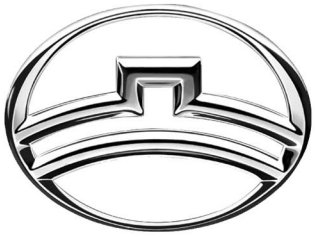

improving little by little everyday

Great Wall Motor Company Limited

Add:2266 Chaoyang South Avenue, Baoding City, Hebei Pro, P.R.China.
PostCode:071000
Sales direct line:0086-312-2197688 Fax:0086-312-2197680
Service direct line:0086-312-2197682
http://www.gwm.com.cn

Version number: 06-06-01/01